riscogroup.com

RISCO University

RISCO GROUP

Creating Security Solutions, With Care

ProSYS Plus

Zone Termination

V 1.1.0.10

Lesson Objectives

By the end of this lesson, you will be able to:

- Describe the different Zone Terminations in ProSYS Plus
- Explain Detector's Voltage and Resistance sampling
- Explain the key points of Zone Termination in ProSYS Plus

Agenda

- ✓ Zone Termination Overview
- ✓ Configuring Zone Termination In ProSYS Plus
- ✓ Key Points to Remember for installation and retrofit
- ✓ Popular FAQ’s

Zone Inputs Connections

No Indication in the System

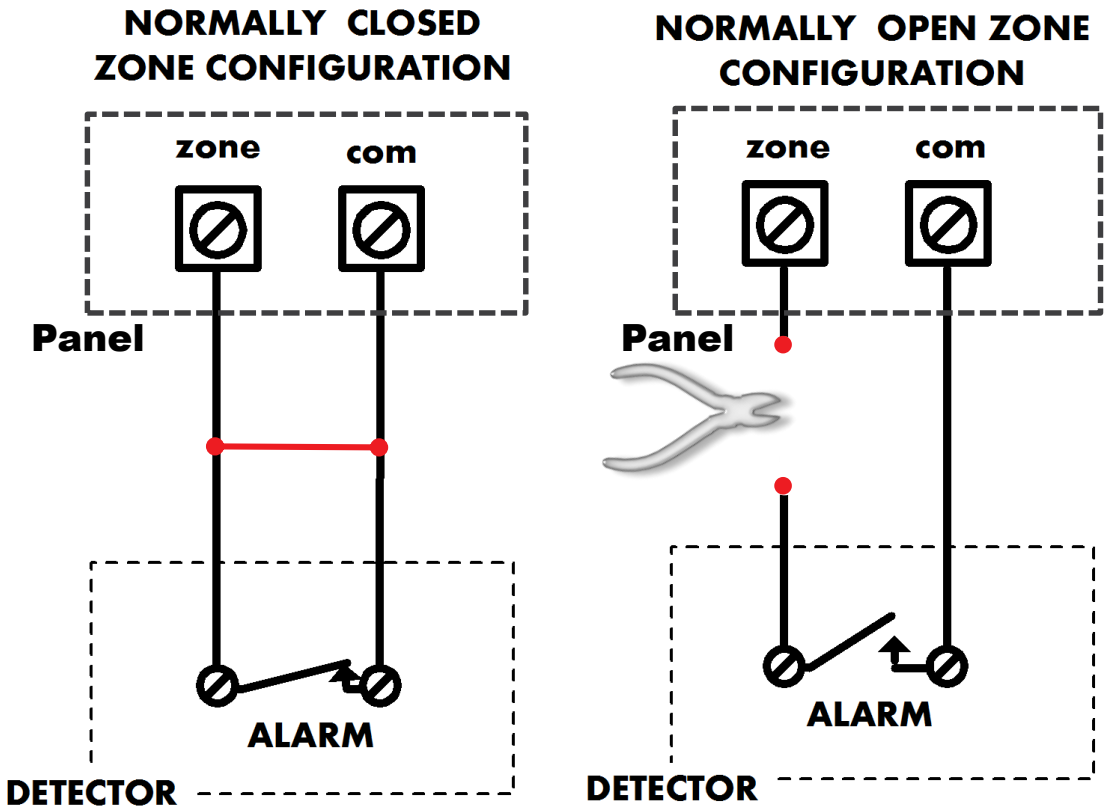

End Of Line Zone

Detector Resistance = ∞

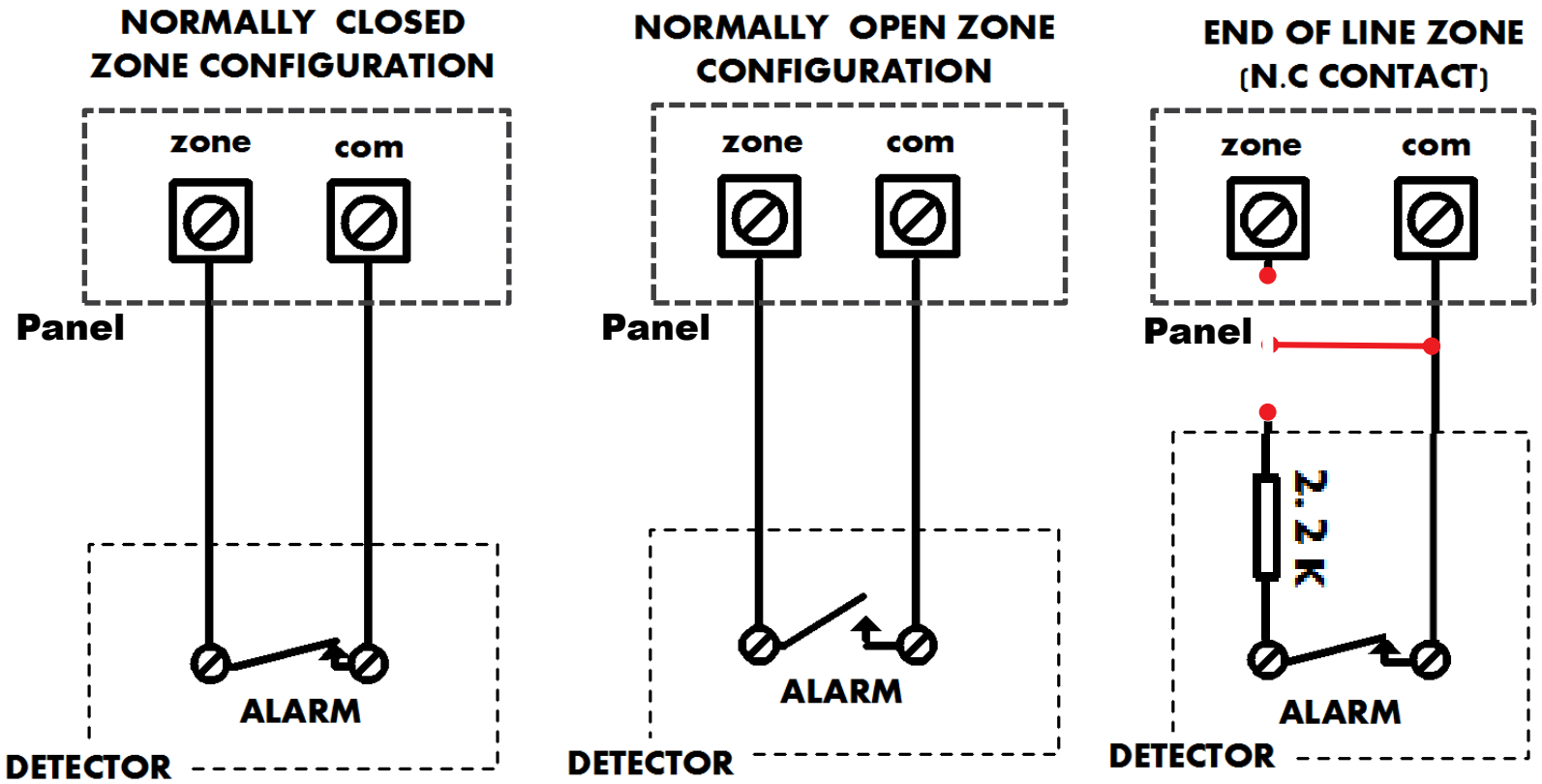

Tamper Connection Limitation & Solution

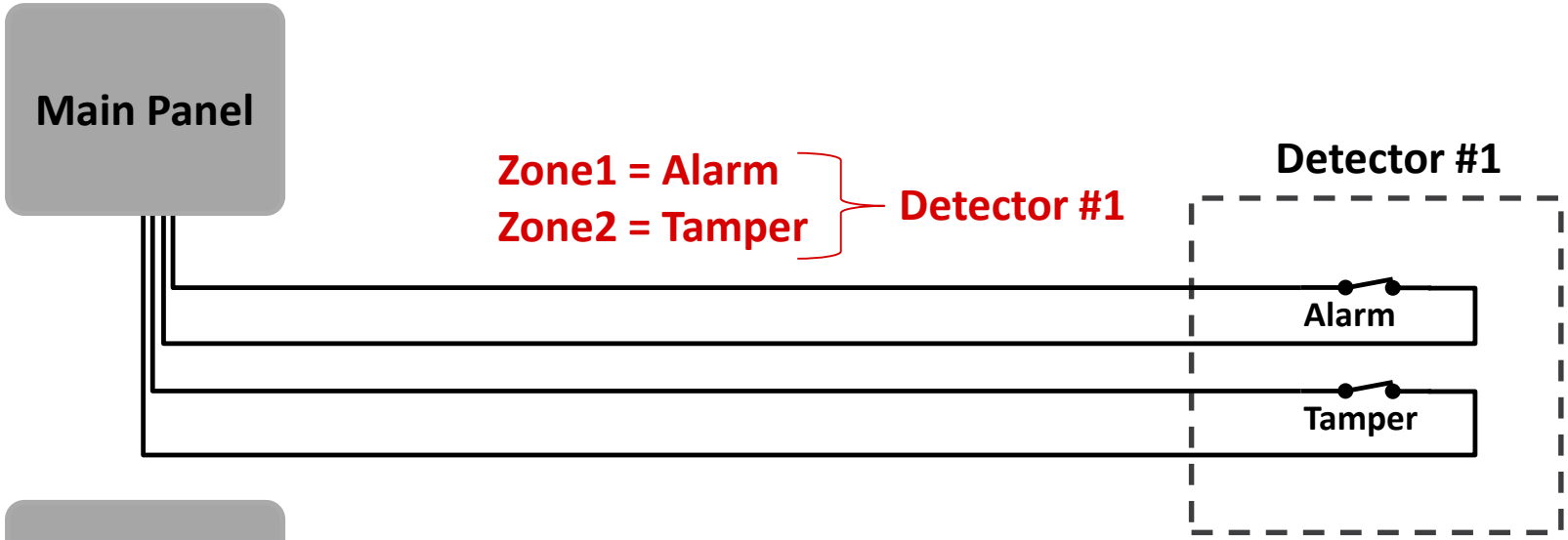

Double End of Line

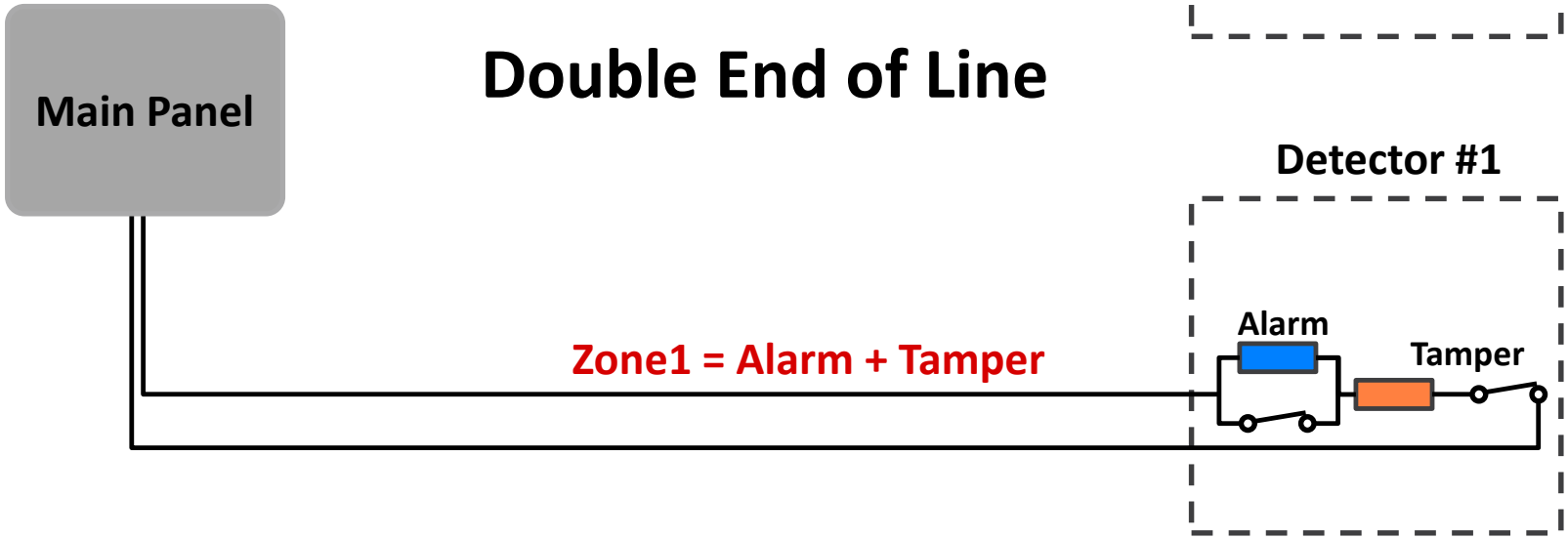

Double End of Line (DEOL) Connection

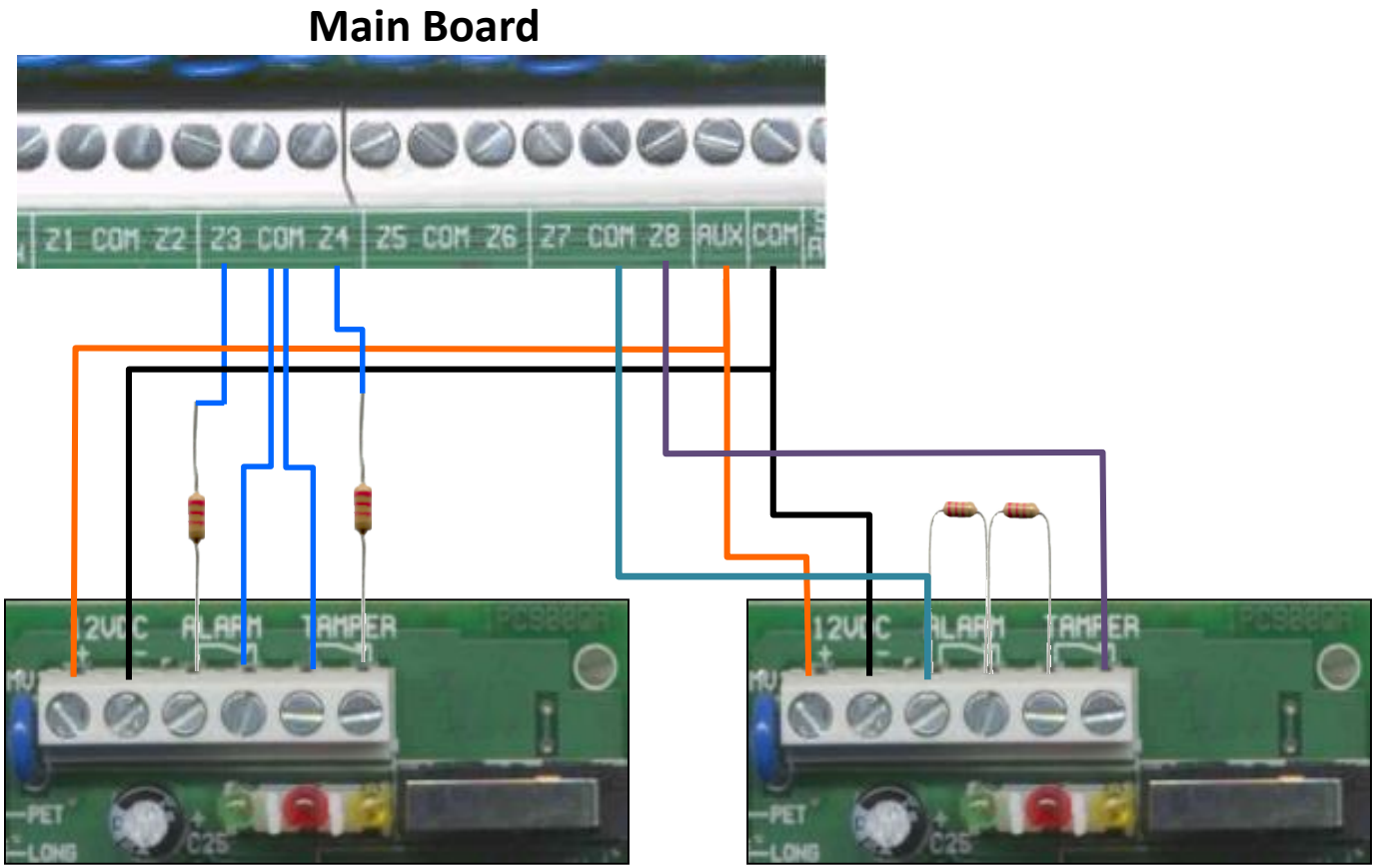

DEOL – Voltage Sampling in ProSYS Plus/LightSYS

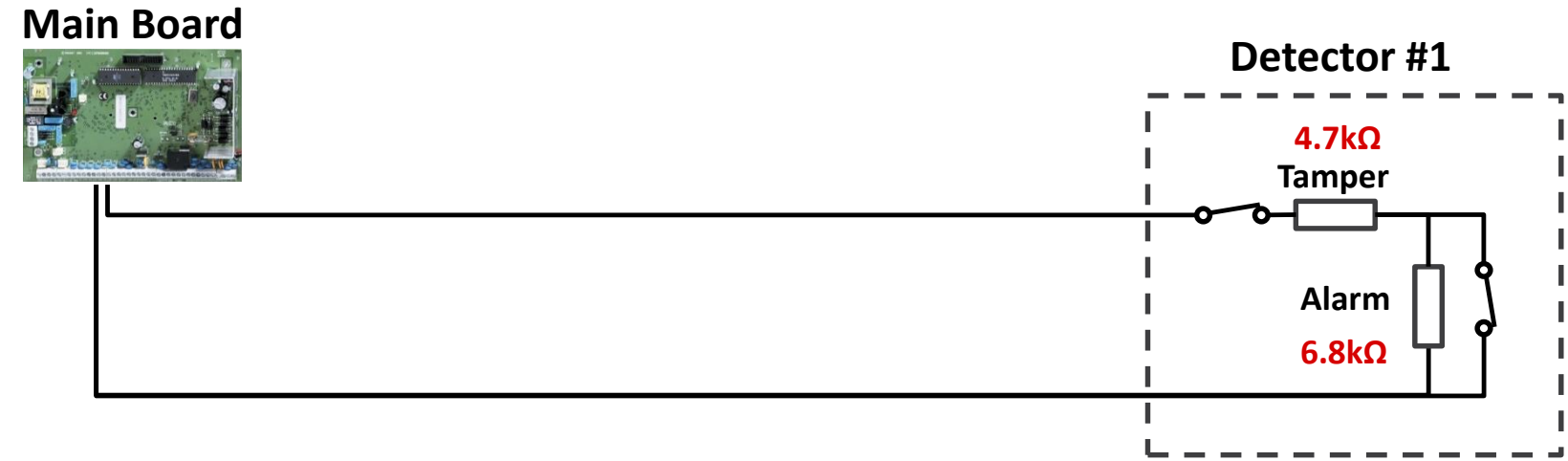

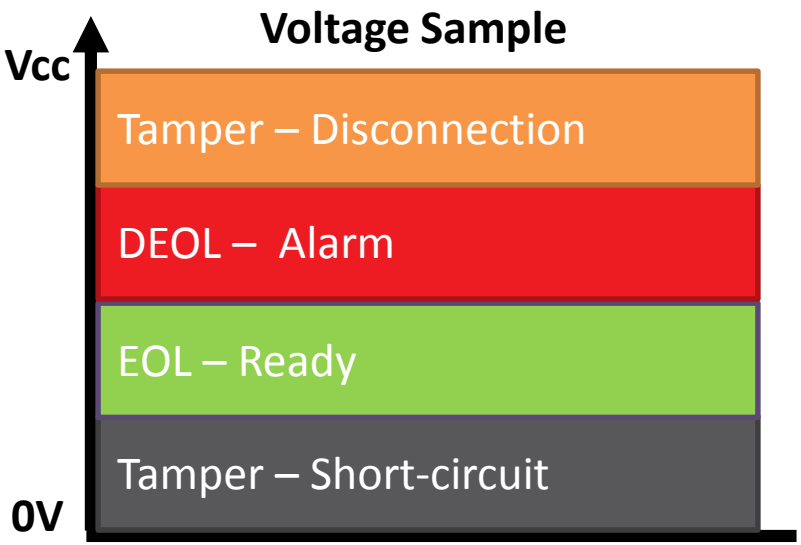

DEOL – Voltage Sampling in ProSYS Plus/LightSYS

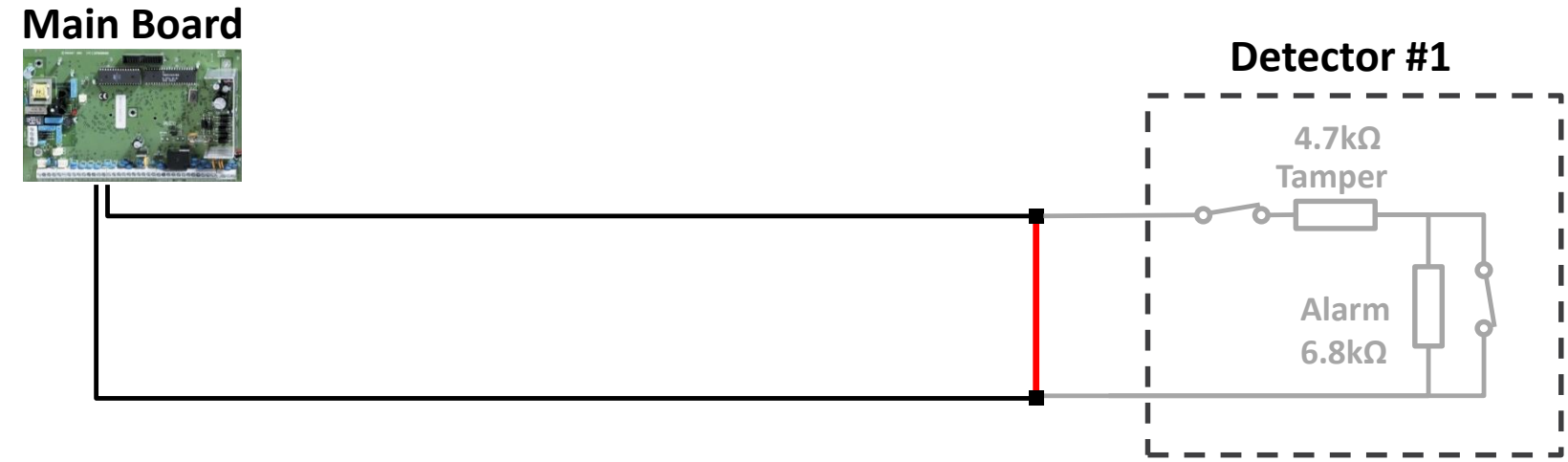

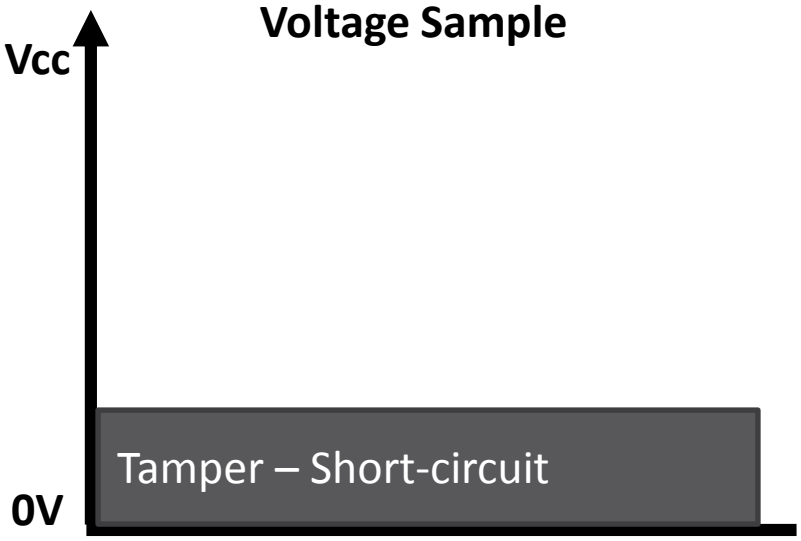

DEOL – Voltage Sampling in ProSYS Plus/LightSYS

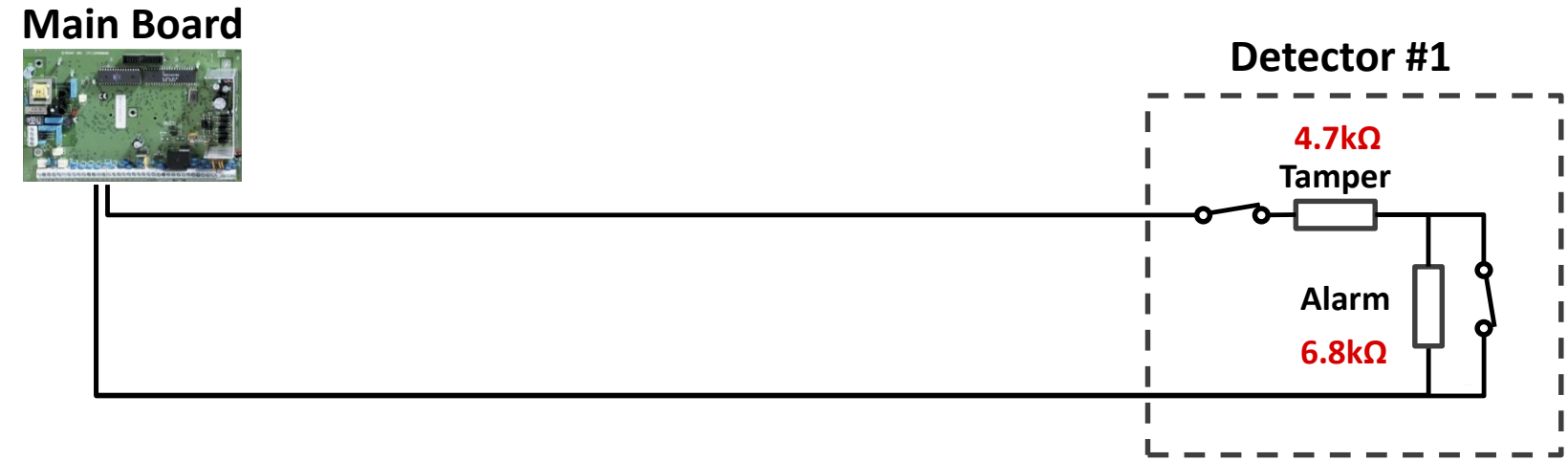

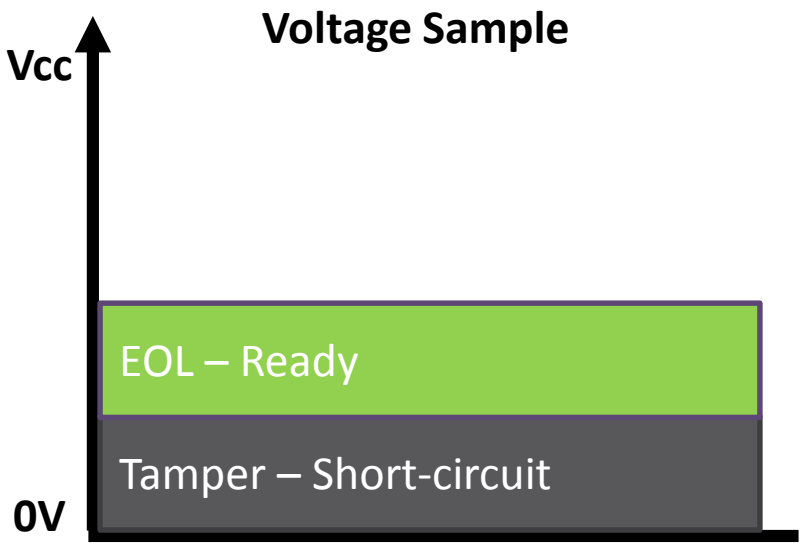

DEOL – Voltage Sampling in ProSYS Plus/LightSYS

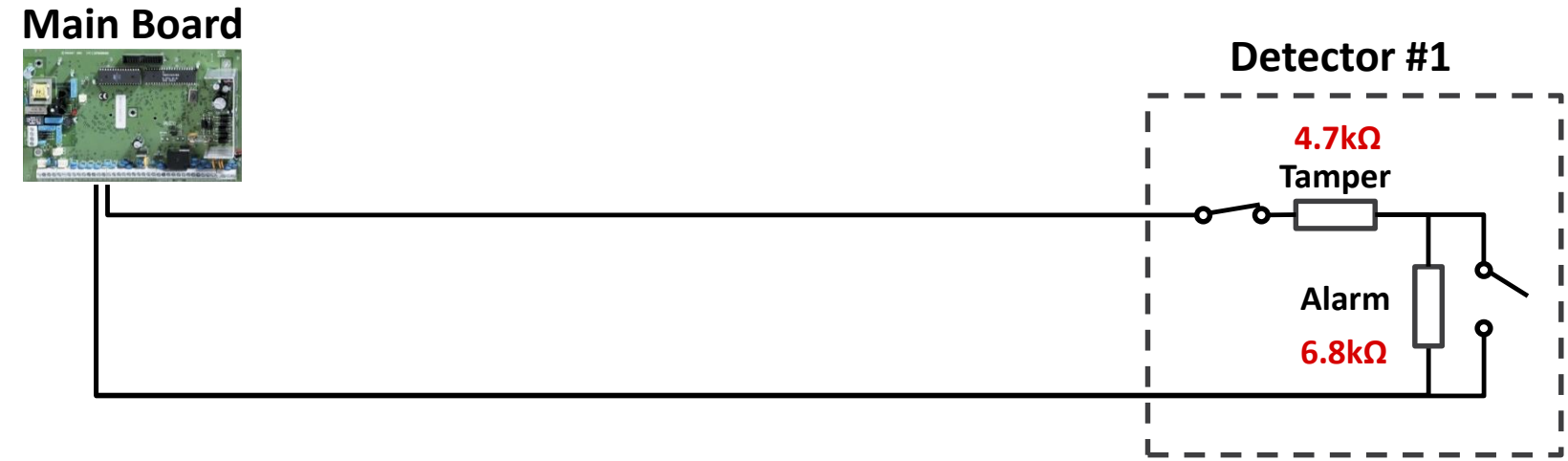

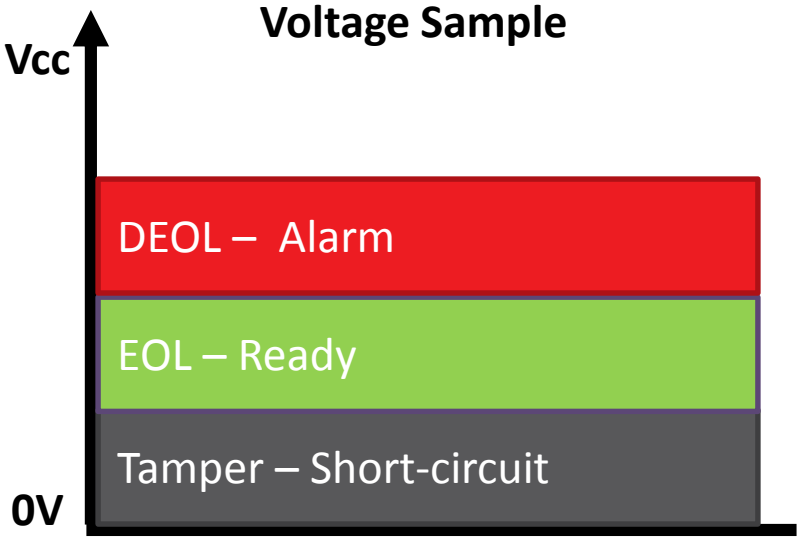

DEOL – Voltage Sampling in ProSYS Plus/LightSYS

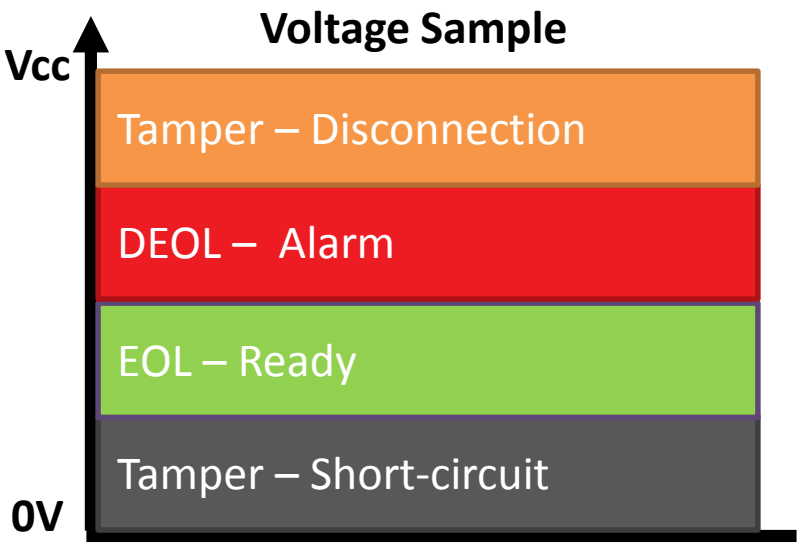

Double End of Line (DEOL) – Detector Side

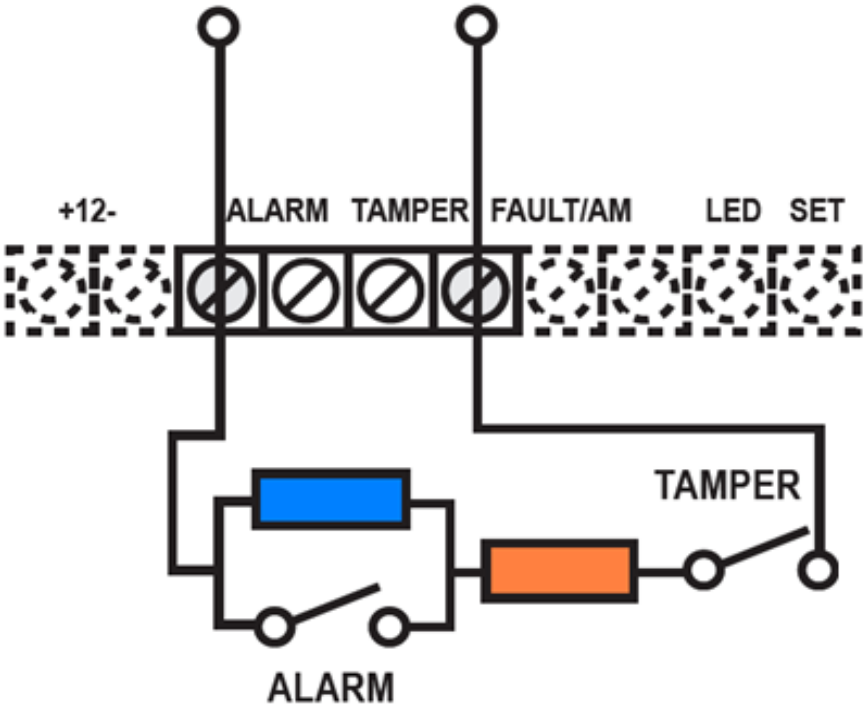

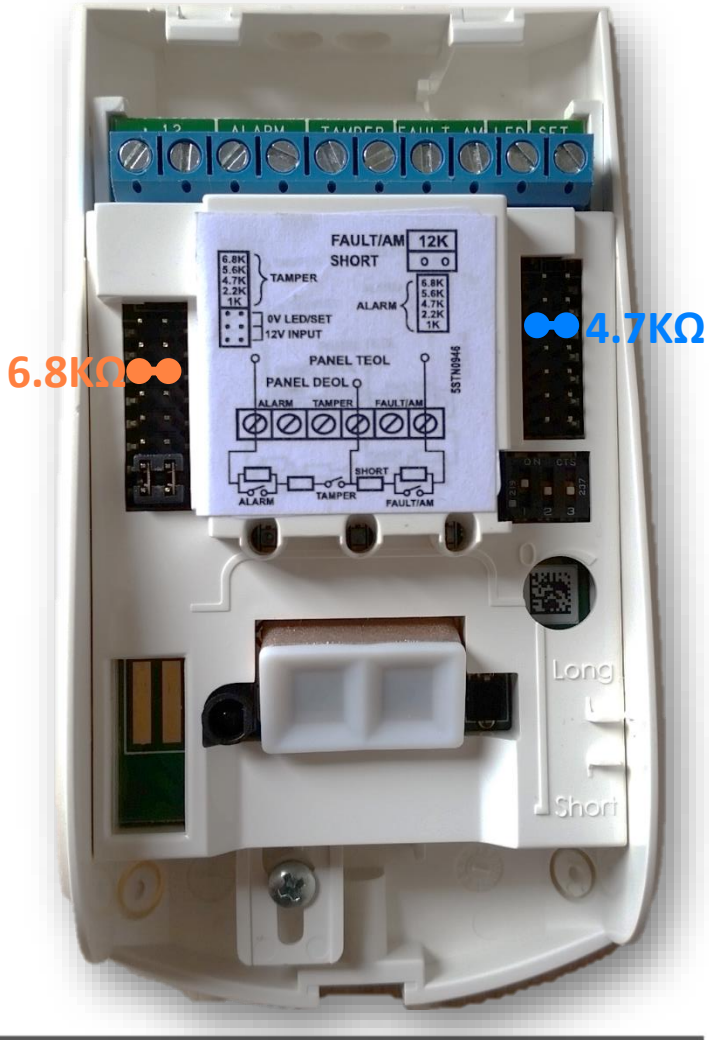

TEOL – Voltage Sampling in ProSYS Plus/LightSYS

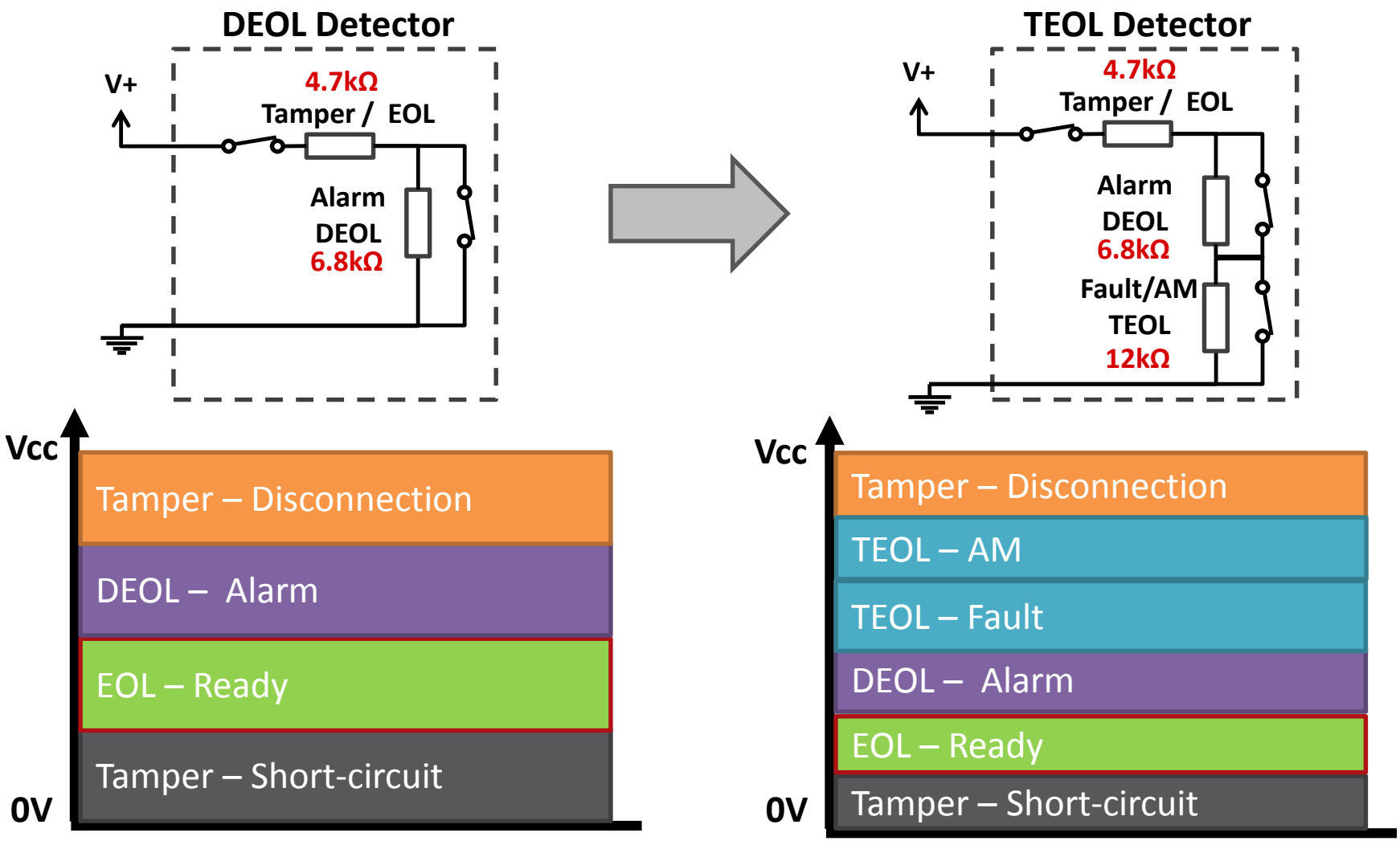

TEOL – Voltage Sampling in ProSYS Plus/LightSYS

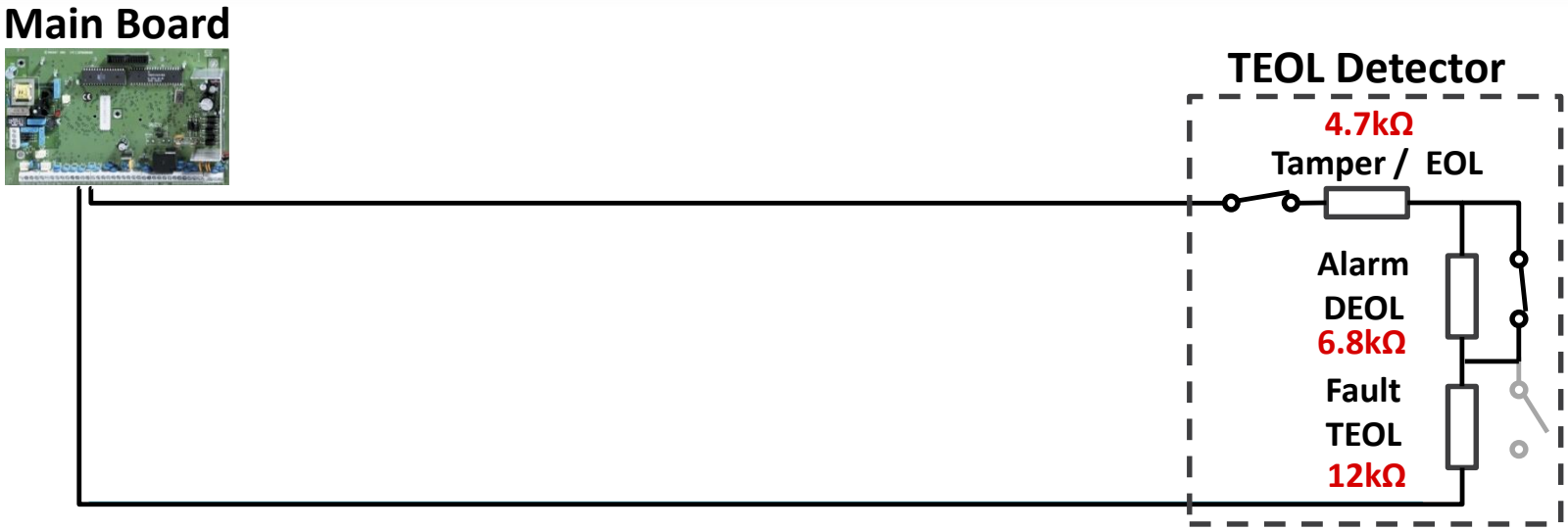

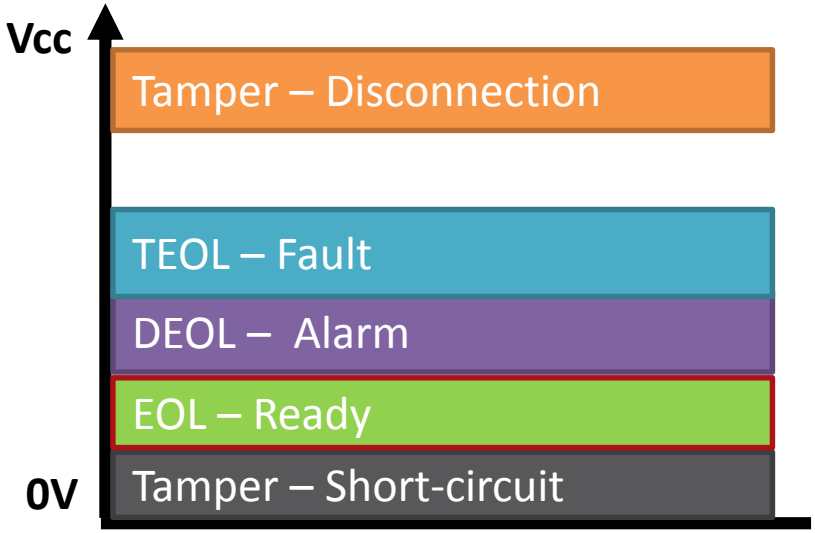

TEOL – Voltage Sampling in ProSYS Plus/LightSYS

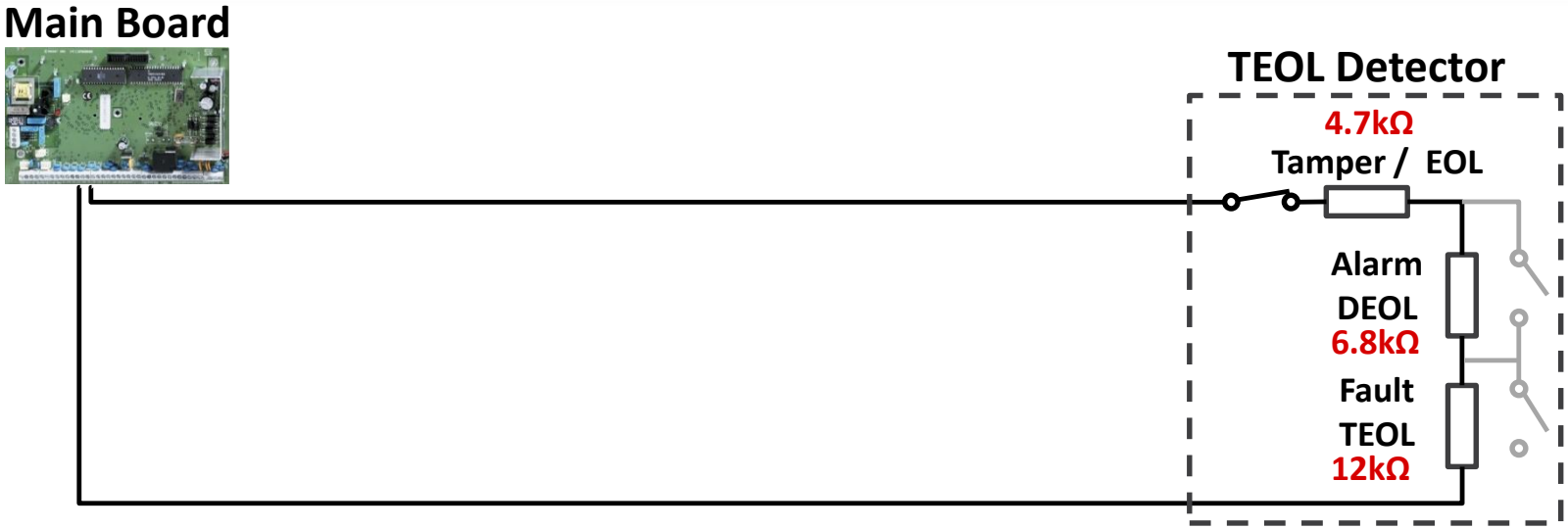

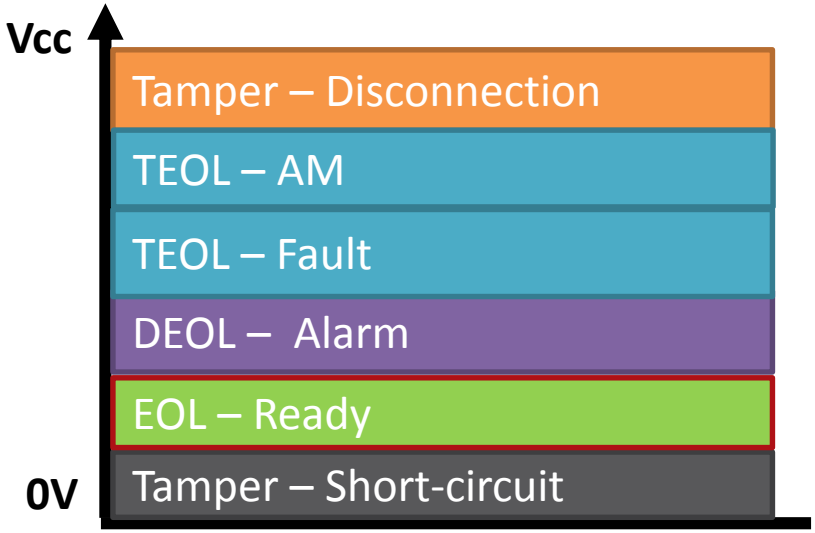

Triple End of Line (TEOL) – Detector Side

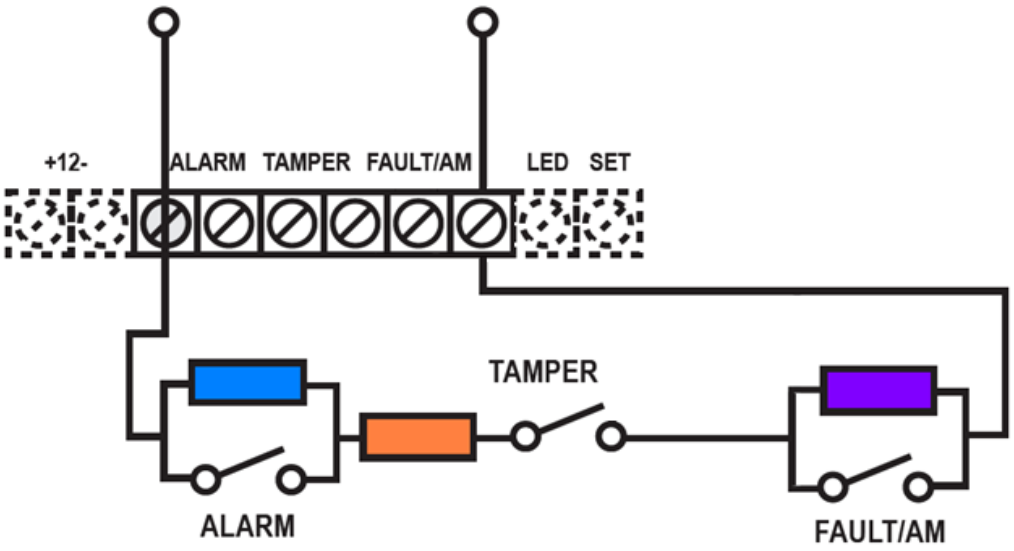

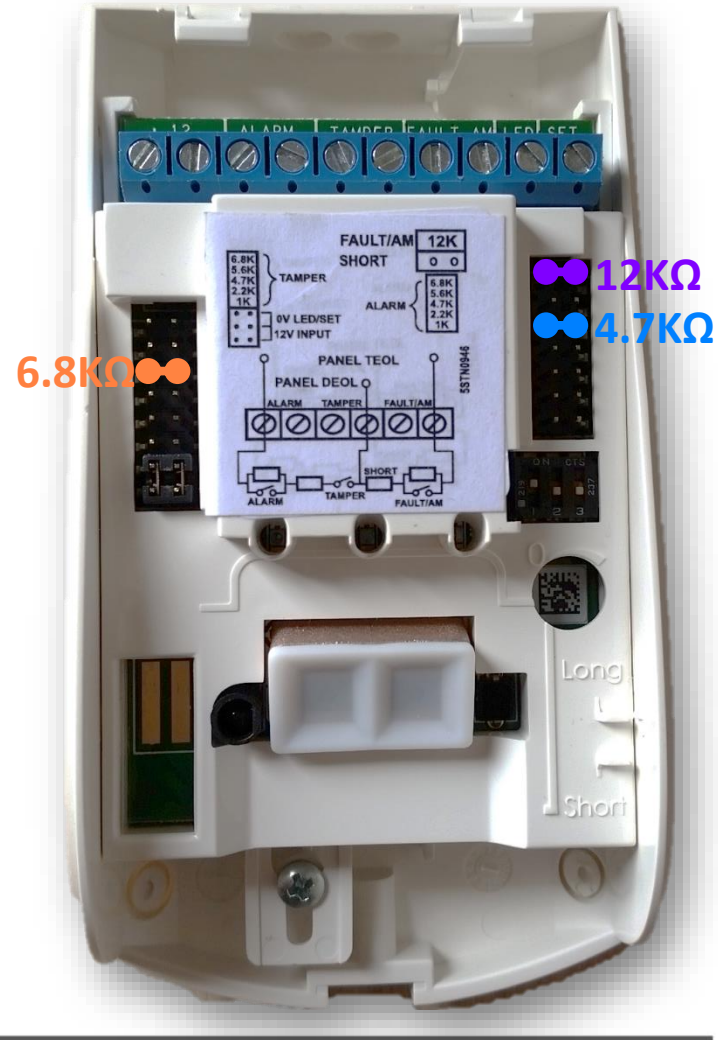

Voltage Sampling in ProSYS Vs. ProSYS Plus

ProSYS

ProSYS Plus

- Zone termination is set manually by replacing the resistors for each detector

- Zone termination is set digitally by the Keypad or the CS
- No need to replace the resistors

Agenda

- ✓ Zone Termination Overview
- ✓ Configuring Zone Termination In ProSYS Plus
- ✓ Key Points to Remember for installation and retrofit
- ✓ Popular FAQ's

Configuring Zone Terminations

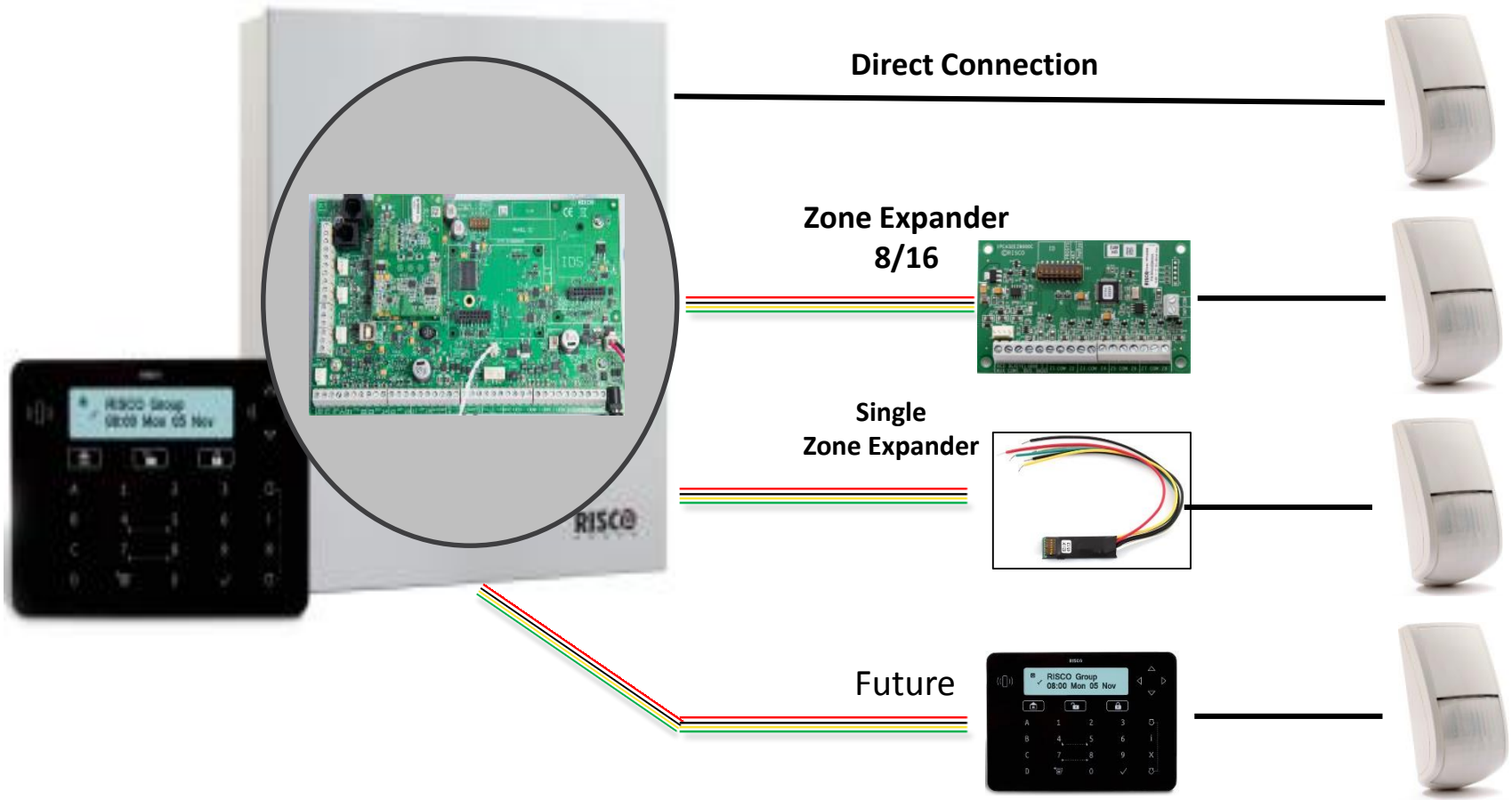

Wired Connection to Main Panel

Select Main Unit Zone Resistance

Set Each Zone Termination

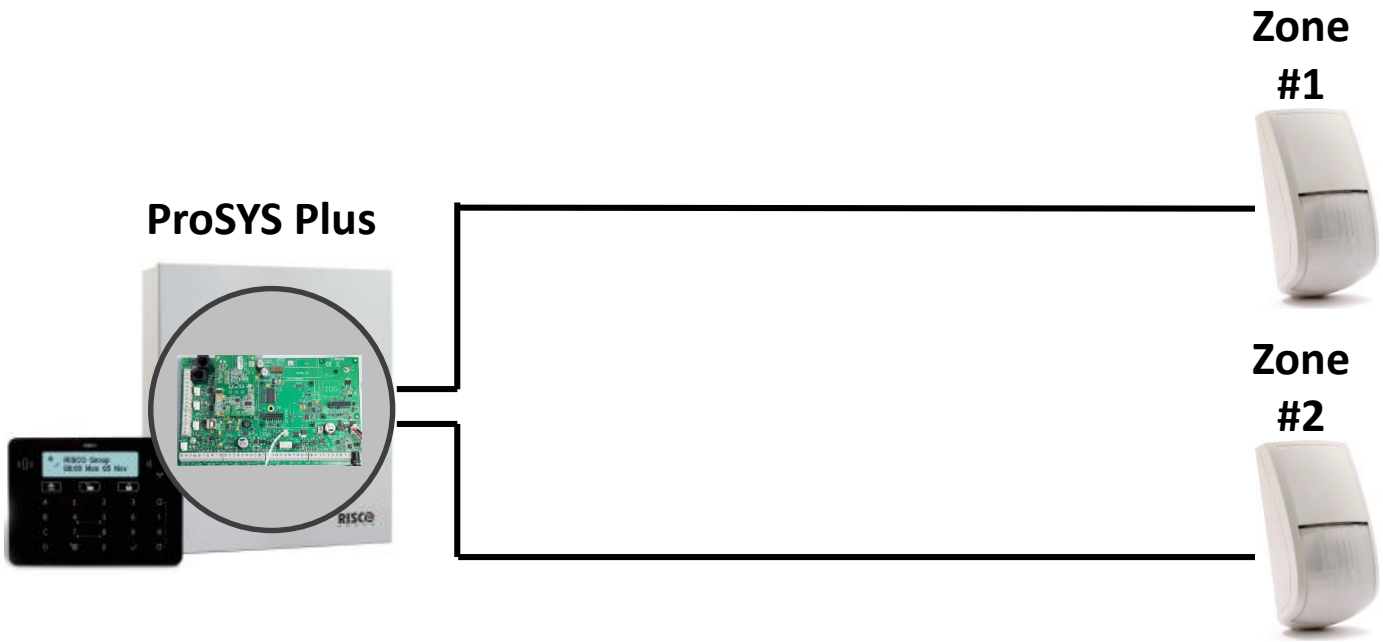

- EOL = 4.7KΩ
- DEOL = 6.8KΩ
- TEOL= 12KΩ

Configuration Software [Administrator]

Client View Communication Tools Help

RISCO GROUP

- Configuration Software
  - ProSYS Plus Test Panel
    - Personal Information
    - ProSYS Plus [Cloud TCP/IP - riscocloud.com:34000]
      - Connection Settings
      - System
      - Devices
        - Zones
        - Output
        - Remote Controls
        - KeyPads
        - Sirens
        - Proximity Key Reader
        - Power Supply
      - Codes
      - Communication
        - Type
          - PSTN
          - GSM
          - TCP/IP
          - LRT
        - Monitoring Station
        - Configuration Software
        - Follow Me
        - Cloud
      - Audio
      - Scheduler
      - Activities
        - Allocation
        - Status
        - Diagnostic
        - Event Log
        - Main Unit Upgrade

Configuration Software > ProSYS Plus Test Panel > ProSYS Plus [Cloud TCP/IP - riscocloud.com:34000] > Activities > Status

Partitions — Legend...

Zones — Legend...

Trouble / Status

Unit	Trouble / Status
System	
	Low Battery
	Phone Line
	LS Switch On
Power Supply	
2. PS 02	
	Low Battery

Outputs

No.	Label	Status
1	Output 1	Not Active
2	Output 2	Not Active
3	Output 3	Not Active
4	Output 4	Not Active
5	Output 5	Not Active
6	Output 6	Not Active
7	Output 7	Not Active
8	Output 8	Not Active
9	Output 9	
10	Output 10	
11	Output 11	
12	Output 12	

Actions

- Alarm reset
- Set Box Tamper Bypass
- Enter Service Mode

Status:

Clock

Time: 19/03/2016 17:35 Set Clock...

ProSYS Plus Test Panel

Connection Status: 03:02:03 | Troubles: | Status: | Partitions: Ready

Wired Connection to Zone Expander

Select Zone Expander Resistance

↓

Set Each Zone Termination

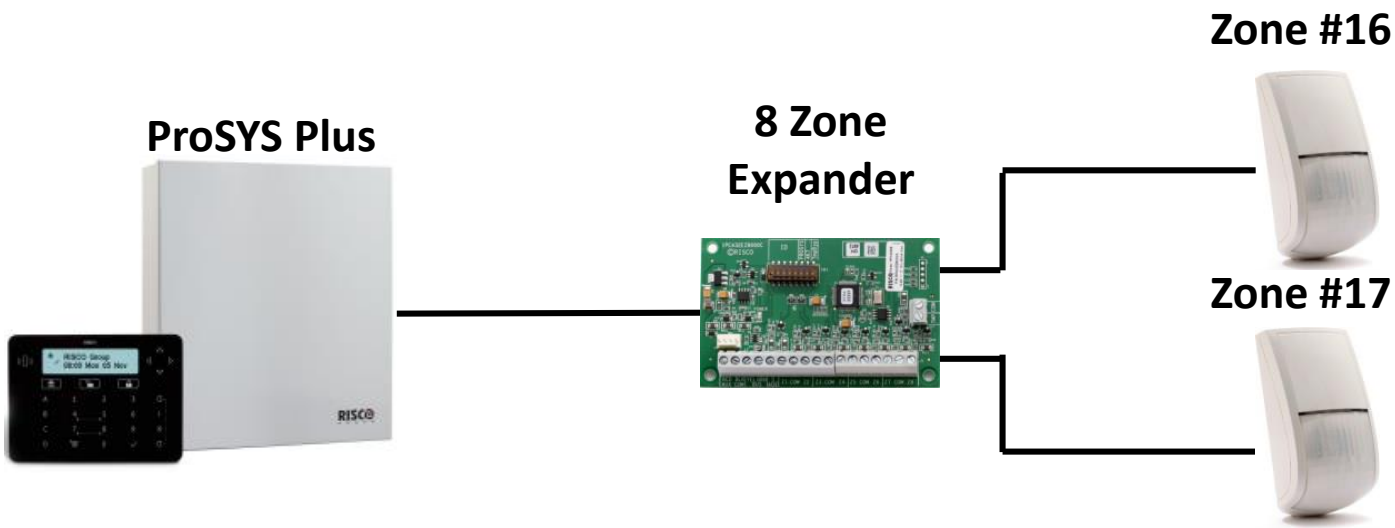

- EOL = 4.7KΩ
- DEOL = 6.8KΩ
- TEOL= 12KΩ

Configuration Software [Administrator]

Client View Communication Tools Help

RISCO GROUP

- Configuration Software
  - 40000000277
    - Personal Information
    - ProSYS Plus [Cloud TCP/IP ...
      - Connection Settings
      - System
      - Devices
        - Zones
        - Output
        - Remote Controls
        - KeyPads
        - Sirens
        - Proximity Key Reader
        - Power Supply
      - Codes
      - Communication
        - Type
          - PSTN
          - GSM
          - TCP/IP
          - LRT
      - Monitoring Station
      - Configuration Software
      - Follow Me
      - Cloud
      - Audio
      - Scheduler
      - Activities
        - Allocation
        - Status
        - Diagnostic
        - Event Log
        - Main Unit Upgrade

Configuration Software > 40000000277 > ProSYS Plus [Cloud TCP/IP - riscocloud.com:34000] > Activities > Status

Partitions — Legend...

1 2 3 4 5 6 7 8 9 10 11 12 13 14 15 16
17 18 19 20 21 22 23 24 25 26 27 28 29 30 31 32

Zones — Legend...

01 02 03 04 05 06 07 08 9 10 11 12 13 14 15 16
17 18 19 20 21 22 23 24 25 26 27 28 29 30 31 32
33 34 35 36 37 38 39 40 41 42 43 44 45 46 47 48
49 50 51 52 53 54 55 56 57 58 59 60 61 62 63 64
65 66 67 68 69 70 71 72 73 74 75 76 77 78 79 80
81 82 83 84 85 86 87 88 89 90 91 92 93 94 95 96
97 98 99 100 101 102 103 104 105 106 107 108 109 110 111 112

Trouble / Status

Unit	Trouble / Status
System	
	Low Battery
	Phone Line
	LS Switch On
GSM	
	SIM Card Trouble

Outputs

No.	Label	Status
1	OUTPUT 001	Not Active
2	OUTPUT 002	Not Active
3	OUTPUT 003	Not Active
4	OUTPUT 004	Not Active
5	OUTPUT 005	Not Active
6	OUTPUT 006	Not Active
7	OUTPUT 007	Not Active
8	OUTPUT 008	Not Active
9	Output 9	
10	Output 10	
11	Output 11	
12	Output 12	

Actions

Alarm reset

Set Box Tamper Bypass

Enter Service Mode

Status:

Clock

Time: 14/05/2016 16:56 Set Clock...

40000000277asdasdasd

Connection Status: 03:05:49 | Troubles: | Status: | Partitions: Ready

Diagnostics Test

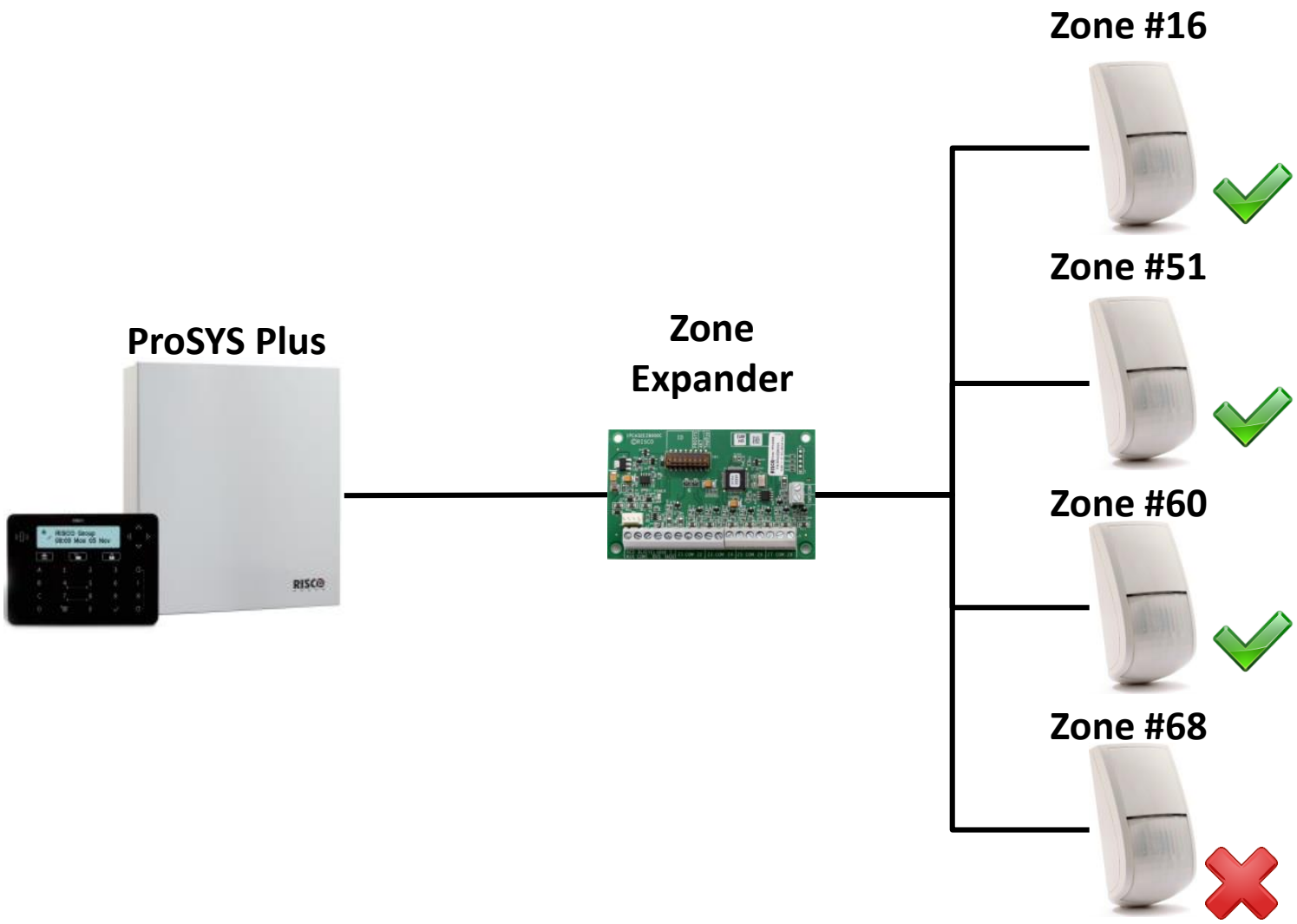

Configuration Software [Administrator]

Client View Communication Tools Help

RISCO GROUP

- Configuration Software
  - ProSYS PLus Test295
    - Personal Information
    - ProSYS Plus [Cloud TCP/IP - riscocloud.com:34000]
      - Connection Settings
      - System
      - Devices
        - Zones
        - Output
        - Remote Controls
        - KeyPads
        - Sirens
        - Proximity Key Reader
        - Power Supply
      - Codes
      - Communication
        - Type
          - PSTN
          - GSM
          - TCP/IP
          - LRT
      - Monitoring Station
      - Configuration Software
      - Follow Me
      - Cloud
      - Audio
      - Scheduler
      - Activities
        - Allocation
        - Status
        - Diagnostic
        - Event Log
        - Main Unit Upgrade

ProSYS PLus Test295

Configuration Software > ProSYS PLus Test295 > ProSYS Plus [Cloud TCP/IP - riscocloud.com:34000] > Devices > Zones

Detectors — Select Partitions

No.	Label	Channel	Type	Sound at Arm	Termination	Group	Partition
1	Zone 001	E 0:00:01	Exit/Entry 1	Bell	TEOL	A B C D	1
2	Zone 002	E 0:00:02	Entry Follower	Bell	TEOL	A B C D	1
3	Zone 003	E 0:00:03	Instant	Bell	TEOL	A B C D	1
4	Zone 004	E 0:00:04	Instant	Bell	EOL	A B C D	1
5	Zone 005	E 0:00:05	Instant	Bell	EOL	A B C D	1
6	Zone 006	E 0:00:06	Instant	Bell	EOL	A B C D	1
7	Zone 007	E 0:00:07	Instant	Bell	EOL	A B C D	1
8	Zone 008	E 0:00:08	Instant	Bell	EOL	A B C D	1
9	Zone 009	E 1:00:01	Instant	Bell	EOL	A B C D	1
10	Zone 010	N 0:00:00	Instant	Bell		A B C D	1
11	Zone 011	N 0:00:00	Instant	Bell		A B C D	1
12	Zone 012	N 0:00:00	Instant	Bell		A B C D	1
13	Zone 013	N 0:00:00	Instant	Bell		A B C D	1
14	Zone 014	N 0:00:00	Instant	Bell		A B C D	1
15	Zone 015	N 0:00:00	Instant	Bell		A B C D	1
16	Zone 016	N 0:00:00	Instant	Bell		A B C D	1
17	Zone 017	N 0:00:00	Instant	Bell		A B C D	1
18	Zone 018	N 0:00:00	Instant	Bell		A B C D	1
19	Zone 019	N 0:00:00	Instant	Bell		A B C D	1
20	Zone 020	N 0:00:00	Instant	Bell		A B C D	1
21	Zone 021	N 0:00:00	Instant	Bell		A B C D	1
22	Zone 022	N 0:00:00	Instant	Bell		A B C D	1
23	Zone 023	N 0:00:00	Instant	Bell		A B C D	1
24	Zone 024	N 0:00:00	Instant	Bell		A B C D	1
25	Zone 025	N 0:00:00	Instant	Bell		A B C D	1
26	Zone 026	N 0:00:00	Instant	Bell		A B C D	1
27	Zone 027	N 0:00:00	Instant	Bell		A B C D	1
28	Zone 028	N 0:00:00	Instant	Bell		A B C D	1
29	Zone 029	N 0:00:00	Instant	Bell		A B C D	1
30	Zone 030	N 0:00:00	Instant	Bell		A B C D	1
31	Zone 031	N 0:00:00	Instant	Bell		A B C D	1
32	Zone 032	N 0:00:00	Instant	Bell		A B C D	1

Sequential Confirmation... Zone Crossing... Soak Test...

Connection Status: 00:03:39 | Troubles: Status: Partitions: Ready

Zone Termination Test Results

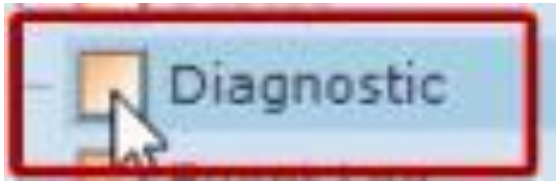

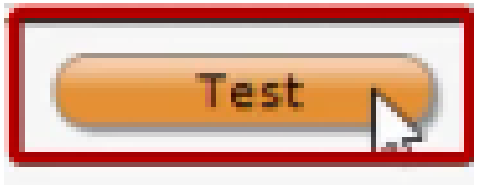

No.	Label	Resistance [KOhm]	Voltage [VDC]
61	Zone 061	2.2	0.6
62	Zone 062	---	3.2
63	Zone 063	2.3	0.7
64	Zone 064	2.3	0.7
65	Zone 065	---	3.2
66	Zone 066	---	3.2
67	Zone 067	---	3.2
68	Zone 068	---	3.2

DEOL – Zone in Tamper Alarm

Zones on Board

No.	Label	Resistance [KOhm]	Voltage [VDC]
1	ZONE 001	---	3.2
2	ZONE 002	---	3.3
3	ZONE 003	---	3.2
4	ZONE 004	---	3.2
5	ZONE 005	---	3.2
6	ZONE 006	---	3.2
7	ZONE 007	---	3.2
8	ZONE 008	---	3.2

Test

2.2K, 2.2K

DEOL – Zone Not Ready or in Alarm

Zones on Board

No.	Label	Resistance [KOhm]	Voltage [VDC]
1	ZONE 001	4.5	1.1
2	ZONE 002	---	3.2
3	ZONE 003	---	3.2
4	ZONE 004	---	3.2
5	ZONE 005	---	3.2
6	ZONE 006	---	3.2
7	ZONE 007	---	3.2
8	ZONE 008	---	3.2

Test

2.2K, 2.2K

DEOL – Zone in Ready Mode

Zones on Board

No.	Label	Resistance [KOhm]	Voltage [VDC]
1	ZONE 001	2.2	0.7
2	ZONE 002	---	3.2
3	ZONE 003	---	3.2
4	ZONE 004	---	3.2
5	ZONE 005	---	3.2
6	ZONE 006	---	3.2
7	ZONE 007	---	3.2
8	ZONE 008	---	3.2

Test

2.2K, 2.2K

DEOL – Zone Short Circuited

Zones on Board

No.	Label	Resistance [KOhm]	Voltage [VDC]
1	ZONE 001	0	0
2	ZONE 002	---	3.2
3	ZONE 003	---	3.2
4	ZONE 004	---	3.2
5	ZONE 005	---	3.2
6	ZONE 006	---	3.2
7	ZONE 007	---	3.2
8	ZONE 008	---	3.2

Test

2.2K, 2.2K

DEOL – Zone Disconnected

Zones on Board

No.	Label	Resistance [KOhm]	Voltage [VDC]
1	ZONE 001	---	3.2
2	ZONE 002	---	3.3
3	ZONE 003	---	3.2
4	ZONE 004	---	3.2
5	ZONE 005	---	3.2
6	ZONE 006	---	3.2
7	ZONE 007	---	3.2
8	ZONE 008	---	3.2

Test

2.2K, 2.2K

TEOL – Zone in Tamper Alarm

No.	Label	Resistance [KOhm]	Voltage [VDC]
9	Zone 009	2.2	0.6
10	Zone 010	2.2	0.6
11	Zone 011	2.2	0.6
12	Zone 012	---	3.2
13	Zone 013	---	3.2

4.7K, 6.8K, 12K

TEOL – Zone in Ready Mode

Zone Expander

Zone Expander ID: 1

Aux Voltage [VDC]: 13.8

Version: RP512EZ1600A0.1515 JUL 2015 FDBB

4.7K, 6.8K, 12K

Zones on Zone Expander

No.	Label	Resista KOhm]	Voltage [VDC]
9	Zone 009	2.2	0.6
10	Zone 010	2.2	0.6
11	Zone 011	2.2	0.6
12	Zone 012	---	3.2
13	Zone 013	4.7	1.1
14	Zone 014	---	3.2
15	Zone 015	---	3.2
16	Zone 016	---	3.2

Test

TEOL – Zone Not Ready or in Alarm

Zones on Zone Expander

No.	Label	Resistance [KOhm]	Voltage [VDC]
9	Zone 009	2.2	0.6
10	Zone 010	2.2	0.6
11	Zone 011	2.2	0.6
12	Zone 012	---	3.2
13	Zone 013	11.5	1.9
14	Zone 014	---	3.2
15	Zone 015	---	3.2
16	Zone 016	---	3.2

Test

4.7K, 6.8K, 12K

TEOL – Zone in Anti Mask Mode

Zone Expander

Zone Expander ID: 1

Aux Voltage [VDC]: 13.8

Version: RP512EZ1600A0.1515 JUL 2015 FDBB

4.7K, 6.8K, 12K

Zones on Zone Expander

No.	Label	Resista [Ohm]	Voltage [VDC]
9	Zone 009	2.2	0.6
10	Zone 010	2.2	0.6
11	Zone 011	2.2	0.6
12	Zone 012	---	3.2
13	Zone 013	23.5	2.4
14	Zone 014	---	3.2
15	Zone 015	---	3.2
16	Zone 016	---	3.2

Test

TEOL – Zone Short Circuited

Zones on Zone Expander

No.	Label	Resistance [KOhm]	Voltage [VDC]
9	Zone 009	2.2	0.6
10	Zone 010	2.2	0.6
11	Zone 011	2.2	0.6
12	Zone 012	---	3.2
13	Zone 013	0	0
14	Zone 014	---	3.2
15	Zone 015	---	3.2
16	Zone 016	---	3.2

Test

4.7K, 6.8K, 12K

TEOL – Zone Disconnected

Zone Expander

Zone Expander ID: 1

Aux Voltage [VDC]: 13.9

Version: RP512EZ1600A0.1515 JUL 2015 FDBB

4.7K, 6.8K, 12K

Zones on Zone Expander

No.	Label	Resista	KOhm]	Voltage [VDC]
9	Zone 009	2.2		0.6
10	Zone 010	2.2		0.6
11	Zone 011	2.2		0.6
12	Zone 012	---		3.2
13	Zone 013	---		3.2
14	Zone 014	---		3.2
15	Zone 015	---		3.2
16	Zone 016	---		3.2

Test

Voltage and Resistor Calculator

EOL	DEOL1	DEOL2	TEOL	Vx(EOL)	Vx(DEOL1)	Vx(DEOL2)	Vx(TEOL)
4.7	6.8	12	18.8	1.20	1.93	2.21	2.45

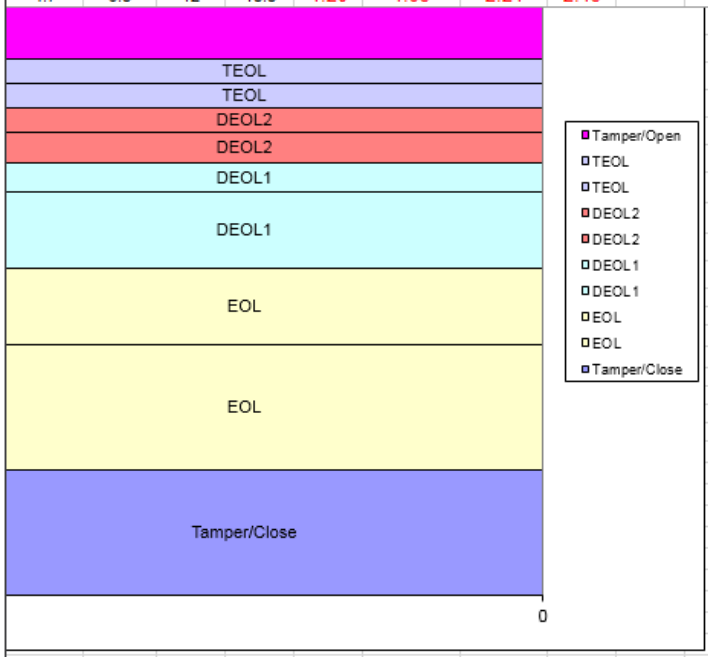

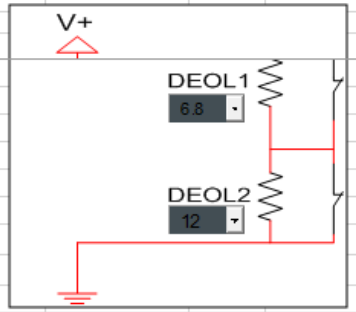

5	3.74	3.3	3.3		5	2.7k	2.7k	
6	4.7	4.7	4.7		6	3.3K	3.3K	
7	5.6	5.6	5.6		7	3.3k	4.7k	
8	6.8	6.8	6.8		8	3.74K	6.98K	
9	10	6.98	6.98		9	4.7k	4.7k	
10		10	10		10	4.7K	6.8K	12K
11			12		11	5.6K	5.6K	
12			0		12	6.8K	2.2.K	
Custom	3.9	3.9	3.9		13	10K	10K	
					14	custom	custom	

	Tamper/Close	EOL	EOL	DEOL1	DEOL1	DEOL2	DEOL2	TEOL	TEOL	Tamper/Open
0	0.60	0.60	0.36	0.36	0.14	0.14	0.12	0.12	0.12	0.74
0	0.60	0.60	0.36	0.36	0.14	0.14	0.12	0.12	0.12	0.74

Levels

0	Voltage	Resistens
EOL -	0.60	1.83
EOL	1.20	4.70
EOL + / DEOL1 -	1.56	7.39
DEOL1	1.93	11.50
DEOL1 +/ DEOL2-	2.07	13.80
DEOL2	2.21	16.70
DEOL2+/TEOL-	2.33	19.69
TEOL	2.45	23.50
TEOL+	2.56	28.51

Agenda

- ✓ End Of Line Resistors Overview
- ✓ Configuring Zone Termination In ProSYS Plus
- ✓ Key Points to Remember for installation and retrofit
- ✓ Popular FAQ's

Avoiding False Alarm/Tamper

Improve Grounding

Use Twisted Shielded cables

Resistance per AWG Size and Distance

- It is important to select wire of the correct attributes to minimize power loss and ensure reliable system operation
- Take into account both the installation's current requirements and the wiring distances involved

AWG Gauge Size	Wire Diameter		Resistance: Meters		Resistance: Feet	
	Millimeters	Inches	Ω Per Meter	Ω Per 100 Meters	Ω Per Foot	Ω Per 1000 Feet
24	0.50	0.020	0.085	8.5	0.026	26.0
22	0.64	0.025	0.052	5.2	0.016	16.0
20	0.80	0.031	0.032	3.2	0.010	10.0
19	0.90	0.035	0.026	2.6	0.008	8.0
18	1.00	0.040	0.020	2.0	0.006	6.0
16	1.27	0.050	0.013	1.3	0.004	4.0
14	1.63	0.064	0.008	0.82	0.0025	2.5

AWG = American Wire Gauge

Configuration of DEOL & TEOL

Correct Configuration

Resistance:
DEOL

Zone #10
Termination: DEOL

Zone #11
Termination: EOL

Zone #12
Termination: DEOL

All Configurations are supported **EXCEPT** TEOL

Incorrect Configuration

Resistance:
DEOL

Zone #10
Termination: TEOL

Zone #11
Termination: DEOL

Zone #12
Termination: TEOL

Zone Expander Termination should be set to TEOL if any zone is TEOL

Resistance Options

ID	EOL	DEOL	TEOL
0	Customized		
1	2.2K	2.2K (Default)	
2	4.7K	6.8K	12K
3	6.8K	2.2K	
4	10K	10K	
5	3.74K	6.98K	
6	2.7K	2.7K	
7	4.7K	4.7K	
8	3.3K	4.7K	
9	1K	1K	
10	3.3K	3.3K	
11	5.6K	5.6K	
12	2.2K	1.1K	
13	2.2K	4.7K	

CS View

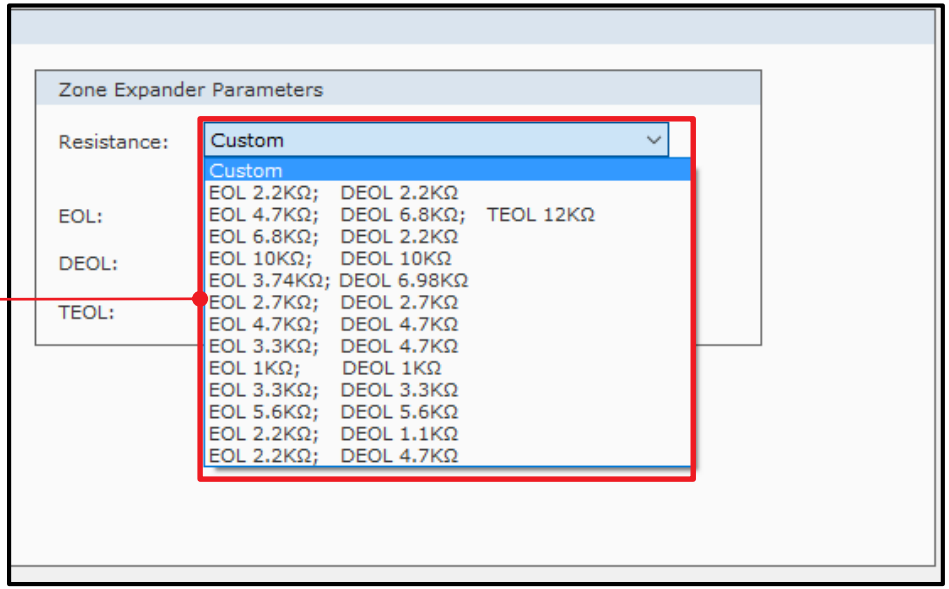

Resistor Options and Control Panels

CONTROL PANEL	MARKET	EOL	DEOL	TEOL
PROSYS		2.2k	2.2k	
PROSYS UK	UK	4.7K	6.8K	12K
RISCO UK(GT)		4.7K	6.8K	12K
Concept Alarm Panel	Australia	6.8K	2.2.K	
Tecom Alarm Panel	Australia	10K	10K	
NX Alarm panel - DAS	Australia		3.3K	
NX Alarm panel - DAS	Australia	3.74K	6.98K	
Tecno Alarm Panels	Italy	2.7k	2.7k	
Bentel Panels	Italy	10K	10K	
AVS Electronics	Italy	4.7k	4.7k	
AXEL	Italy	3.3k	4.7k	
ELKRON	Italy	22k	22k	
PARADOX	Italy,brazil	1K	1K	
Networks	IBERIA	3.3K	3.3K	
Bosch	IBERIA	3.3K	3.3K	
Nnapco	BRAZIL	2.2k	2.2k	
DSC	BRAZIL	5.6K	5.6K	

Customized Resistance

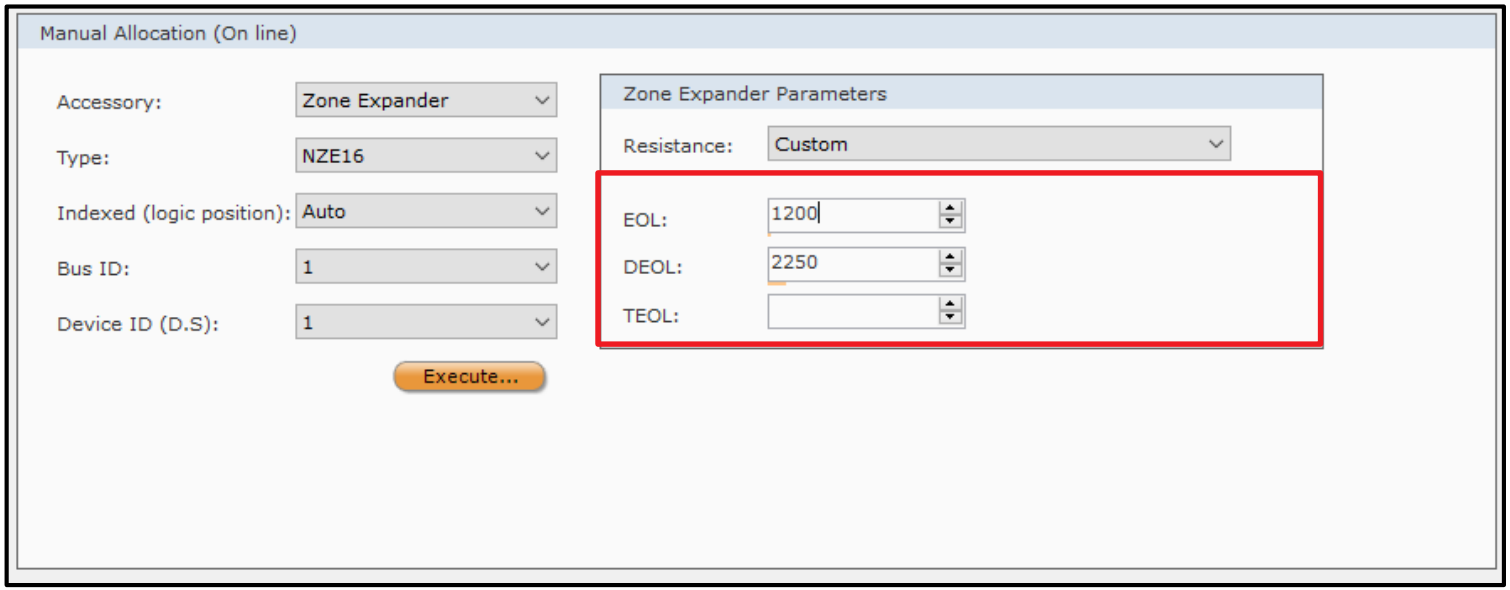

The system counts Customized option as TEOL termination

Configuration Software does not support TEOL setting as “0”.

Retrofitting to ProSYS Plus

Replace all zone expanders to ProSYS Plus ones

Define the resistors group to panel and to connected Zone Expander

Define Zone termination type to each zone according to the connected termination

Define the rest of the parameters for the detectors (type, description, siren, etc.)

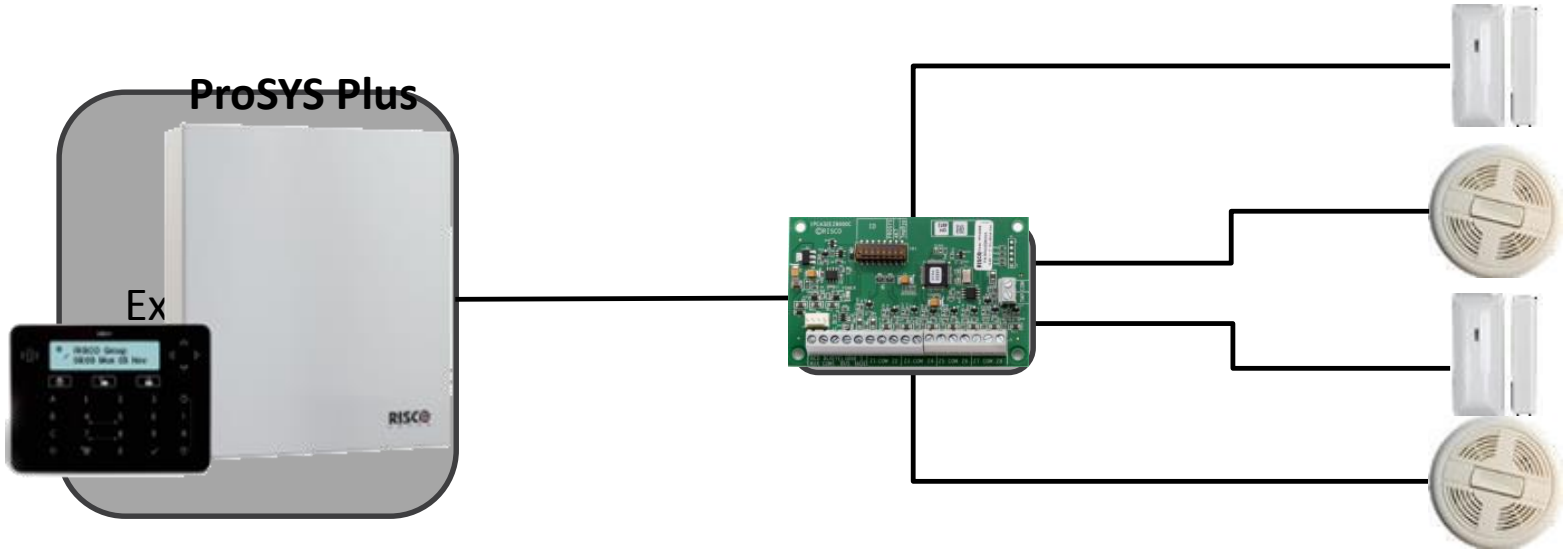

Agenda

- ✓ End Of Line Resistors Overview
- ✓ Configuring Zone Termination In ProSYS Plus
- ✓ Key Points to Remember for installation and retrofit
- ✓ Popular FAQ's

Zone Termination FAQ's

	Question	Answer
1	What happens if there is a conflict between the CS setup and the KeyPad setup?	A conflict cannot happen, the last programming is the one that overrides all previous settings
2	What should we check in order to ensure the ground is OK and robust enough?	In order to make sure the ground is OK, you should run a diagnostics and make sure you get the required results
3	What resistors can we use when using Triple End of Line zone termination	When using TEOL zone termination, you can only use 4.7kΩ, 6.8kΩ and 12kΩ
4	Can you set a zone expander with DEOL when the connected zones use TEOL	No, you cannot. Whenever a zone uses TEOL, the relevant zone expander should also be set to TEOL
5	What are the main differences between ProSYS and ProSYS Plus regarding Zone Terminations	In ProSYS Plus Zone termination is set digitally by the Keypad or the CS, so no need to replace the resistors, while in ProSYS you had to replace them

Lesson Summary

In this lesson we covered the following topics…

- Zone Termination Overview
- Detectors Voltage and Resistance Sampling
- Configuration of Zone Termination in ProSYS Plus
- Key points when installing and retrofitting ProSYS plus

Any Questions?

Thank You

RISCO GROUP

riscogroup.com