# LightSYS™

## Flexible Hybrid System

# Installation and Programming Manual

RISCO GROUP

Creating Security Solutions. With Care.

## Important Notice

This guide is delivered subject to the following conditions and restrictions:

This guide contains proprietary information belonging to RISCO Group. Such information is supplied solely for the purpose of assisting explicitly and properly authorized users of the system.

No part of its contents may be used for any other purpose, disclosed to any person or firm, or reproduced by any means, electronic or mechanical, without the express prior written permission of RISCO Group.

The information contained herein is for the purpose of illustration and reference only.

Information in this document is subject to change without notice.

Corporate and individual names and data used in examples herein belong to their respective owners.

## Compliance Statement

Hereby, RISCO Group declares that the LightSYS series of central units and accessories are designed to comply with:

EN50131-1, EN50131-3 Grade 2
EN50130-5 Environmental class II
EN50131-6 Type A
UK: DD243:2004, PD 6662:2004, ACPO (Police)
EN50136-1-1 and EN50136-2-1 :
ATS 5 for IP/GPRS; ATS 2 for PSTN
Signaling security: - Substitution security S2
- Information security I3

All rights reserved.
© 2012 RISCO Group

August 2012

# Table of Contents

**Chapter 1 Introduction** **9**

What is LightSYS? ..... 9
LightSYS Architecture and Capabilities ..... 10
LightSYS Features ..... 11

**Chapter 2 Mounting and Wiring** **17**

LightSYS installation Steps ..... 17
Choosing the mounting location ..... 17
Wall Mounting the LightSYS Box ..... 18
AC adaptor and main board ..... 18
Main Board Wiring ..... 21
Main Board — Bus Connection ..... 21
Zone Inputs Wiring ..... 22
Wiring Auxiliary Devices ..... 23
Wiring Internal Bell ..... 24
Wiring Bell Tamper ..... 24
Wiring Utility Outputs ..... 25
Back Tamper (Optional) ..... 26
Connecting a telephone line to the LightSYS ..... 26
Placing the Communication Modules ..... 27
GSM/GPRS ..... 27
Plug-in IP ..... 28
Plug-in Fast Modem 2400 ..... 29
Plugs ..... 29
Jumpers ..... 30
DIP switches ..... 31
Connecting Backup Battery ..... 31

**Chapter 3 Installing Bus Devices** **32**

Bus connection ..... 32
Setting Bus Accessory ID Numbers ..... 33
Installing Bus Expanders ..... 34
Keypads ..... 34
8 Zone Expander ..... 34
Utility Outputs ..... 36
Wireless Receiver ..... 38
3A Switching Mode Power Supply ..... 39
Digital Voice Module ..... 44

Sounders ..... 46
ProSound ..... 46
Lumin 8 ..... 47
Connecting Bus Detectors ..... 47
Single Zone Expander ..... 48
Completing the Installation ..... 49

**Chapter 4 Installer Programming 50**

Programming Methods ..... 50
Configuration Software ..... 50
PTM: Data Storing Device ..... 50
LCD Keypad ..... 52
Keypad Programming Key Functions ..... 52
Entering Text Descriptions (Labels): ..... 52
Keypad Timeout ..... 53
Accessing Installer Programming Menu ..... 53
First Time Power Up ..... 53
Regular operation mode ..... 54
Identifying the Connected Devices ..... 54
Automatic Setting ..... 54
Bus Test ..... 55
Wireless device programming workflow ..... 55
Step 1: Allocate a wireless receiver ..... 55
Step 2: Calibrate the Receiver ..... 55
Step 3: Allocating Wireless Device ..... 56
Bus Detectors Programming Workflow ..... 56
Programming bus detectors on the main bus ..... 57
Step 1: Adding Bus Detector to the Main Unit ..... 57
Step 2: Set Bus Zone Basic Attributes ..... 57
Step 3: Programming the Bus Detectors Advanced Parameters ..... 57
Programming bus detectors on a bus expander ..... 57
Step 1: Adding the Bus Expander to LightSYS ..... 58
Step 2: Adding Bus Detector ..... 58
Step 3: Set Bus Zone Basic Attributes ..... 59
Step 4: Programming the Bus Detectors Advanced Parameters ..... 59
Exiting Programming Mode ..... 59
Restoring Manufacturer's Programming Defaults ..... 59
Using the Installer Programming Menus ..... 60
Installer Programming Menu Conventions ..... 60
1 System ..... 61

Timers ..... 61
Controls ..... 65
Labels ..... 80
Sounds ..... 80
Settings ..... 82
Automatic Clock ..... 83
Service Information ..... 84
Firmware Update ..... 84
2 Zones ..... 85
Parameters ..... 85
Zones: Parameters: One By One ..... 85
Zones: Parameters: By Category ..... 87
Label ..... 87
Partition ..... 87
Type ..... 87
Sound ..... 94
Termination ..... 95
Loop Response ..... 96
Advanced ..... 96
Bus Zones Configuration ..... 97
Testing ..... 105
Cross Zones ..... 107
Alarm confirm ..... 109
3 Outputs ..... 110
Nothing ..... 110
Follow System ..... 111
Follow Partition ..... 114
Follow Zone ..... 118
Follow Code ..... 119
4 Codes ..... 121
User ..... 122
Grand Master ..... 124
Installer ..... 124
Sub Installer ..... 124
Code Length ..... 125
5 Communication ..... 126
Method ..... 126
PSTN ..... 126
GSM ..... 128
Timers ..... 128
Controls ..... 132

Parameters ..... 132
Prepay SIM ..... 133
IP ..... 134
IP Config ..... 134
Email ..... 135
Host Name ..... 135
MS Keep alive (Polling) ..... 135
Radio (LRT) ..... 137
Monitoring Station ..... 138
Report Type ..... 138
Accounts ..... 141
Communications Format ..... 141
Controls ..... 142
Parameters ..... 143
MS Timers ..... 143
Report Split ..... 145
Report Codes ..... 147
Configuration SW ..... 147
Follow Me ..... 150
Define FM ..... 150
Report Type ..... 150
Partition ..... 152
Events ..... 152
Restore Events ..... 154
Remote Control ..... 155
Controls ..... 155
Parameters ..... 156
6 Audio ..... 156
Messages ..... 157
Local Announcements ..... 158
7 Install ..... 160
Bus Device ..... 160
Bus Devices: Automatic Setting ..... 160
Bus Devices: Manual Setting ..... 161
Bus Devices: Testing ..... 171
Wireless Devices ..... 173
8 Devices ..... 176
Keyfob ..... 177
Sounder ..... 177
Proximity Key Reader ..... 181
3A Power Supply ..... 181

**Chapter 5 Using the Installer Non-Programming Menus** **183**

Activities Menu ..... 183
Follow Me ..... 183
View Menu ..... 184
Clock Menu ..... 184
Event Log ..... 185
Maintenance ..... 185
Macro ..... 187
Stand Alone Keyfobs ..... 187

**Appendix A Technical Specifications** **188**

**Appendix B LightSYS Accessories** **192**

**Appendix C Wiring** **195**

**Appendix D Library Voice Messages** **198**

**Appendix E Report Codes** **199**

**Appendix F Installer Event Log Messages** **204**

**Appendix G Installer Programming Maps** **213**

**Appendix H EN 50131 and EN 50136 Compliance** **222**

**Appendix I Remote Software Upgrade** **225**

# Table of Figures

Figure 1-1 LightSYS Architecture....10
Figure 1-2 LightSYS-supported Keypads....13
Figure 2-1 Box clip release....18
Figure 2-2 Mounting screw template....18
Figure 2-3 Placing the AC adapter with mains fuse....19
Figure 2-4 Placing the main panel....20
Figure 2-5: Main board wiring diagram....21
Figure 2-6: Main board terminal block....21
Figure 2-7: Terminal block bus connectors....22
Figure 2-8: Wiring U01 for self-powered device....25
Figure 2-9: Perforated Back Tamper Release....26
Figure 2-10 Placing the GSM/GPRS panel and antenna....28
Figure 2-11 Placing the IP modem....28
Figure 2-12 Placing the Fast communication modem....29
Figure 2-13 Placing the battery and attaching the plug....29
Figure 3-1: Terminal block bus connectors....32
Figure 3-2: Zone Expander board and mounting diagrams....35
Figure 3-3: Zone Expander mounting location inside the LightSYS box....36
Figure 3-4: Utility Output Module UO4 (Showing an Example of UO4 Wiring)....36
Figure 3-5: Utility Output Module E08....37
Figure 3-6: Utility Output Module X-10....37
Figure 3-7: Wireless Receiver....38
Figure 3-8: SMPS –General View....39
Figure 3-9: SMPS Inside a Metal Box....40
Figure 3-10: SMPS – AC & Ground Connection....42
Figure 3-11: Voice Module PCB....44
Figure 3-12: Voice Module — Listen/Talk Unit Wiring....45
Figure 3-13: ProSound Bus Wiring....46

# Chapter 1 Introduction

This chapter provides a basic introduction to the LightSYS system and its architecture and capabilities, as described in the following sections:


- What is LightSYS?, below
- LightSYS Architecture and Capabilities, page 10
- LightSYS Features, page 11


## What is LightSYS?

LightSYS is an integrated security system with unrivalled flexibility and advanced expansion capabilities, yet simple to install, program and maintain.

LightSYS provides monitoring and supervision for up to 32 zones. Through its 4-wire bus it can support a variety of optional modules including: assorted keypads, proximity key readers, zone expanders, interactive voice module, 868/433 MHz wireless expansion, supplement power supply, utility outputs and numerous bus detectors.

LightSYS features integrated dual-path and triple-path reporting, with integrated plug in IP module for IP communication, plugin GSM/GPRS modules for advanced cellular communication all in one box, and an IP/GSM receiver package for monitoring stations (MS).

LightSYS provides a new level of remote service and installation convenience, with unique remote diagnostic capabilities, Auto-Install™ technology and bus test which checks communication quality of the bus and enables pinpointing intermittent wiring faults.

LightSYS can be programmed and/or controlled through the remote configuration software installed on a PC computer with a Windows operating system.

For easy maintenance and scalability LightSYS can be upgraded locally or remotely using IP communication.

This LightSYS Installation and Programming Manual details how to install the LightSYS hardware and to program the LightSYS main panel, as described in the following main steps:

- **Step 1: Mounting and Wiring the Main Panel** (Chapter 2)
- **Step 2: Identifying, Mounting and Wiring Keypads and Expansion Modules** (Chapter 3)
- **Step 3: Programming the LightSYS** (Chapters 4 and 5)

**Note:**

While this manual describes all of the above steps, the section on programming the main panel comprises the bulk of the information, as it covers all the programmable functions that can be performed using the keypad.

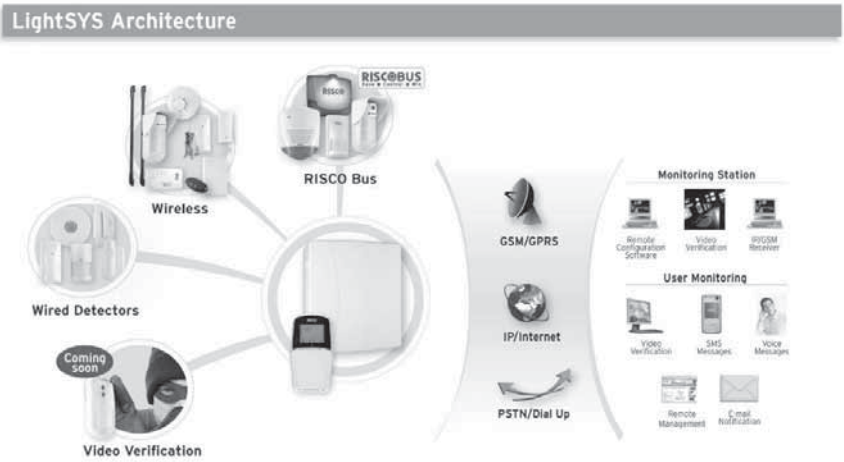


Figure 1-1 LightSYS Architecture

## LightSYS Architecture and Capabilities

| Feature | LightSYS |
|---|---|
| Zones | 8 – 32 wired, wireless or RISCO bus in any combination |
| Partitions | 4 |
| Groups per partition | 4 |
| Zone resistance | Fully selectable |
| Programmable outputs | 4 onboard expandable to 14 |
| User codes | 16 |
| Event log | 500 |
| Keypads | 4 wired/wireless (one-way) |
| Wireless keyfobs | 16 multi-functional + 200 stand-alone |
| Proximity key readers | 8 |
| Follow-me numbers | 16 |
| Communication | PSTN onboard<br>Plug-on IP module or fast modem<br>Plug on GSM/GPRS or integrated KP long range radio<br>Long range radio |
| Account Numbers | 4 |
| Additional inputs | Bell tamper, box tamper |
| Max Current | 1.5 A or 3 A |
| Sirens | 4 |
| Automatic scheduling programs | 4 |

# LightSYS Features

## Main Panel

The main panel is the foundation of the system's operation and has the following features:

- 8 basic hardwired zones
- 4 Utility Outputs:
  - 1 x relay (programmable output) (3 Amps)
  - 3*100mA opto-relays
- Box tamper input (normally open)
- Bell tamper input (using a 2.2KΩ end-of-line resistor)
- 4-wire bus with "quick connector" from the main panel.
- Power for the operation of an external sounder
- Offers the required type of voltage for one or more electronic sirens, bells, or loudspeakers, respectively
- Supports more than 25 zone types
- 4 zone terminations, including: closed-circuit (NC), open-circuit (NO), end-of-line (EOL) resistors, and double end-of-line (DEOL) resistors
- Configurable zone resistance
- 500 Event log on board
- Polycarbonate plastic (1.5 A) or metal (3A)

## Zone Expansion

- Support for additional 24 wired / wireless zones
- Zones expansion using 8-Zone wired expander (Max 3 expanders) or Bus Zones expander
- Bus zones support (maximum 32)
- Up to two wireless 868MHz or 433MHz expansion modules
- 4 zone terminations, including closed-circuit (NC), open-circuit (NO), end-of-line (EOL) resistors, double end-of-line (DEOL) resistors
- Configurable zone resistance
- Supports more than 25 zone types
- Forced setting zone capability

## Wireless Capabilities

- Up to two WL receivers per LightSYS system
- The wireless expansion module includes the following features:
  - Up to 32 supervised wireless zones (bus mode)
  - Up to 16 multi-function keyfobs (bus mode)
  - Up to 200 stand-alone keyfobs (bus and stand-alone modes)
  - Two utility outputs (1A relays)
  - Rolling code technology
  - Signal-jamming detection
  - Programmable supervision time
  - Threshold-level calibration
  - Tamper detection
  - Transmitter's low battery detection
  - Transmitter supervision
  - Nominal center frequency: 868.65 MHz or 433.92 MHz
  - Can be installed inside or outside the LightSYS main enclosure
- When using wireless zones, the LightSYS Wireless expansion modules respond to different wireless detectors, such as:
  - Smoke detectors
  - Door contacts/Door magnet/universal transmitter/door contact +universal
  - Up to 16 rolling code 4-button keyfobs
  - Double key panic keyfob
  - Flood detector
  - Shock detectors
  - CO detectors
  - Gas detectors
  - Glassbreak detectors
  - Internal and External PIR/PET and WatchOUT detectors

## Partitions/Areas

- Up to 4 independent partitions/areas
- Any zone can be assigned to any partition/area
- Each partition/area supports both zone sharing and cross zoning

## Groups

- Groups are combined zones within a partition/area that are used for partial arming.
- Up to four groups of zones can be defined for each partition/area.
- Group arming and setting is performed by using the function keys on the keypad (A, B, C, and D) or by SMS or keyfob. Each keypad key represents a different group of zones.
- Each zone can be assigned to any of the four groups
- Users can arm any of the four groups individually

## Keypads

The LightSYS can support up to four keypads, wired or wireless (1-way) with a choice of different styles.

Model: RP128KCC Model: 432KP Model RP128KP

Figure 1-2 LightSYS-supported Keypads

Each keypad is equipped with:

- Three emergency key zones (panic, fire, and emergency)
- The ability to produce a duress (ambush) code
- Optional proximity tags (different part number)
- Double tamper-protection
- Internal buzzer
- Audible feedback for keypad operations
- Easy-to-use hot-key sequences for simple zone bypassing
- A one-key quick-arm feature for both "Stay" and "Away"
- In partitioned systems, keypads can be selectively assigned to specific partitions
- Four function keys (A,B,C,D) can be programmed to carry a sequence of commands

## User Codes and Authority Levels

- 1 installer code
- 1 sub installer code
- 1 Grand Master code
- Up to 16 user codes
- 8 authority levels
- Codes can be defined to 4 or 6 digits (By default 6 digits)
- Each user can be assigned with a proximity tag or keyfob

## Programmable Utility Outputs

- Supports additional 10 outputs (to the 4 on the main board)
- 4-relay, 8-transistor or 2 relay (WL expander or 3A power supply expander) expansion output modules
- Outputs operation follows system events, codes or scheduling programs
- Output can follow up to 5 zone events (All/Any definition)
- X-10 Module: The LightSYS also supports the connection of an X-10 Transmitter module to its 4-wire expansion bus. X-10 technology converts the LightSYS's programmable output events into a protocol understood by the transmitter module. When triggered, this module generates activation and control signals along existing AC premises wiring to the appropriate X-10 receiver modules, placed and connected within the premises to control lighting and appliances. X-10 transmitter modules are available for the LightSYS, supporting either 8- or 16-premises receiver modules

## Communication

- On-board digital communicator
- Numerous transmission formats to MS including ADEMCO Contact ID and SIA.
- Account number for each monitoring station with additional backup accounts.
- 3 MS link-up options using:
  - PSTN report
  - GSM report
  - IP report
  - GPRS report
  - SMS report
  - Long Range Radio report
- Flexible split-reporting for backup
- Call Save mode from which non-urgent reports can be collected over a designated time period and then transmitted all at once (windowing), and support daily system testing, along with reports of entry into, and exit from, the system's Installer Programming mode
- Follow Me report: In addition to standard communication with the MS, the LightSYS supports a follow-me feature in which the system can report to a homeowner at work, or to a business owner at home, that there has been an alarm at a specific location by voice message over the phone, SMS or Email.

## Advanced Digital Voice Module

The Advanced Digital Voice module provides audible information about the status of your LightSYS system and enables any remote, touch-tone (DTMF) telephone to act as a keypad for the system. The advanced digital voice module can be used in the following situations:

- Upon event occurrence, such as alarm activation, the advanced digital voice module informs you of a security situation, such as intrusion or fire, by calling you and playing a pre-recorded event announcement. You can then acknowledge the event and remotely operate the system.
- Remotely operating the system, which includes:
  - Partition arming and disarming
  - Zone bypassing
  - UO activation/deactivation
  - Changing follow-me numbers
  - Performing listen and talk options
  - Recording opening messages or zone descriptors

### 3 A Power Supply Expansion Module

Although the LightSYS's main panel provides 800mA of auxiliary power (500mA for Bell), the use of a number of additional system modules and detectors will likely exceed this limitation. As a result, the LightSYS supports the addition of up-to-4 remote switched power supplies that each operate from AC power, connect to the bus and provide a total current capacity of 3 Amps.

The power supply modules have connections for powering auxiliary devices and triggering bells, electronic sirens, or loudspeakers during an alarm. Each power supply expansion module also supports its own standby battery and is supervised for the loss of AC, a low battery condition, tamper input, the failure of its auxiliary output power, and the loss of sounder loop integrity.

### Scheduling

Through the use of the system's built-in clock, it is possible to automate system operations at the same time on selected days of the week or at a specific time within the subsequent 24-hour period or during vacation periods.

The system operations include:

- Scheduling automatic arming and disarming (of one or more partitions).
- Scheduling automatic operation of utility outputs.
- Restricting users from disarming during predefined time periods

### Event Logging

The LightSYS has the capability of storing up to 500 significant events, including arming, disarming, bypassing, alarms, troubles, restorals, and resets. These events are logged in order according to date and time, and when applicable, according to zone, partition, area, user code, keypad, etc. When appropriate, such events can be displayed on an LCD keypad or uploaded to the MS via the Configuration Software.

## Advanced Installation Tools

- Auto Installation: For quick and easy installation, the system performs automatic installation of the modules connected to the bus. The system searches for the modules by automatically verifying their connection and operation through the bus-scanning feature and prompts the user to approve each module connection. The auto installation feature is performed automatically after defaulting the system or can also be performed manually.
- Self Monitoring
  - The bus test enables the system to verify the connection and the operation of the modules connected to the bus by indicating the efficiency of each one on a 0-100% scale. Each result is individually displayed on the LCD keypad (or via the Configuration Software).
  - A watchdog feature, which periodically (every minute) and automatically performs a comprehensive self-test and reports when operating faults are found.
  - A maintenance mode which, when selected, performs an active self-check on many of its components.
  - One-man walk testing capabilities, enabling an installer or technician to check the operation of each contact and detector which, when tripped, produce audible feedback and are visibly logged at the keypad from which the test was initiated.
- System programming
  - Local keypad keys
  - Program transfer module: Used to store the programmed configuration of any LightSYS without the need for power.
  - Local/Remote Configuration Software
  - Remote software upgrade over IP

## False Alarm Reduction

In an effort to deter false alarms, the LightSYS provides various programmable features, including the following:

- Cross zoning
- Swinger shutdown
- Audible/visual entry/exit delays
- Fire alarm verification
- Dialer delay before an alarm transmission
- Cancel report option
- Double knock
- Soak test
- Exit termination zone.

# Chapter 2 Mounting and Wiring

This chapter covers the installation and wiring of the LightSYS main unit. Due to its modularity, the specific component assembly will depend on your system configuration. The following assembly is presented in the recommended order.

## LightSYS installation Steps

The following workflow illustrates the recommended method for installing the LightSYS. A detailed description is provided in the following sections of the manual.

1. Create an installation plan.
2. Mount the LightSYS to the wall.
3. Plug in the AC adaptor and main board inside the LightSYS enclosure.
4. Wire the main panel (zones, outputs etc.).
5. Connect telephone line.
6. Plug in communication modules.
7. Allocate and connect bus expansion modules.
8. Set dipswitches and jumpers on the main board and on the various expanders.
9. Connect backup battery and AC power.
10. Perform automatic setting and complete system programming.

### Choosing the mounting location

Before you mount the LightSYS, study the premises carefully in order to choose the exact location of the unit for the best possible coverage and yet easily accessible to expanders and accessories and prospective users of the alarm system. Among the mounting location considerations are the following:

- Centrality of location among all the transmitters.
- Proximity to
  - An uninterrupted AC outlet.
  - A communication (telephone/internet) outlet.
- Distance from sources of interference, such as:
  - Direct heat sources
  - Electrical noise such as computers, televisions etc.
  - Large metal objects, which may shield the antenna.
- Alarm location effectiveness for hearing part arming mode annunciation
- Dryness
- (In case you installed GSM / GPRS module before mounting the system into the desired position) Ensure a good signal of the GSM network (Advisable to have a level of at least 4 out of 5).

**Note:**

For wiring distance and grounding placement considerations, refer to *Appendix A Technical Specifications*

## Wall Mounting the LightSYS Box

The LightSYS is housed in a state-of-the-art plastic enclosement, consisting of back and front panels and featuring a plastic click-mounting for all internal components.

➢ **To prepare the wall for box mounting**

1. Separate the sub-assemblies by pressing the circular locking plastic brackets on either side to release the front cover.

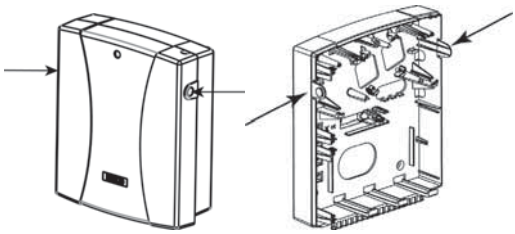

Figure 2-1 Box clip release

2. Hold the mounting bracket against the wall as a template and mark the locations for the mounting holes (4 mounting holes and an additional optional hole for securing the tamper protection bracket item).

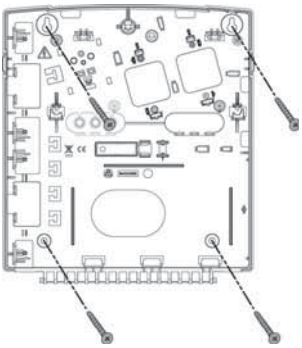

**Note**: For mounting the LightSYS inside a metal enclosure ( RP432BM, RP432BM1) refer to the instructions supplied with the box.

Figure 2-2 Mounting screw template

3. Drill the desired mounting holes and place the screw anchors.

### AC adaptor and main board

The LightSYS is powered by an AC/DC Adaptor 100-240V 50/60Hz 14.4V— 1.5A.

**Caution:**

AC wiring should be done by a certified electrician

1. Connection to AC must be permanent and connect through the mains-fuse terminal block (see Figure 2-3 below):
   A. Affix AC adapter as per placement struts.
   B. According to the location of the electrical and communication outlets, remove the knockouts to allow cable and wire passage for routing through the right or left-side (default) knockout exit.
   C. Do not connect AC power at this point of the installation.

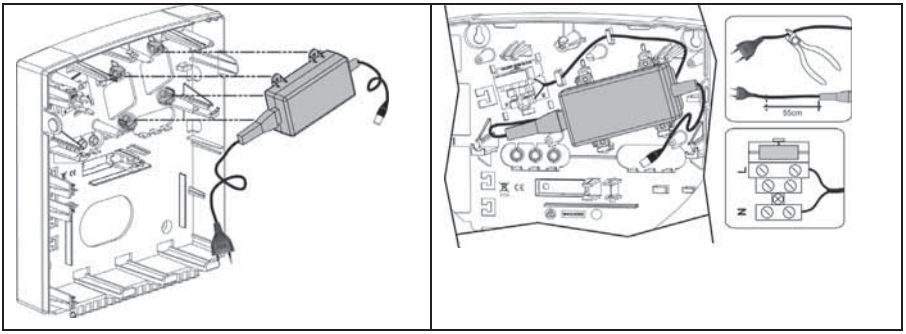


Figure 2-3 Placing the AC adapter with mains fuse

**Note**: 1.5A PS can be mounted inside either the plastic enclosure RP432B or the metal box RP432BM. 3A PS can be mounted only in the metal enclosure RP432BM1.

**Caution:**

- When the main panel is powered on, mains voltage is present on the main PCB.
- To prevent risk of electric shock, disconnect all power (AC transformer and battery) and phone cords before servicing.
- Under no circumstances should mains power be connected to the PCB other than to the main terminal block.
- A readily accessible disconnection device shall be incorporated in the building installation wiring.
- For continued protection against risk of fire, replace fuses only with fuses of the same type and rating.
- Install the socket-outlet near the equipment in an easily accessible location.
- Risk of explosion if battery is replaced by an incorrect type. Replace only with the same type and manufacturer. Dispose of used batteries in accordance with the manufacturer instructions

2. Place the main panel on its four mounting brackets and secure it, as per Figure 2-4

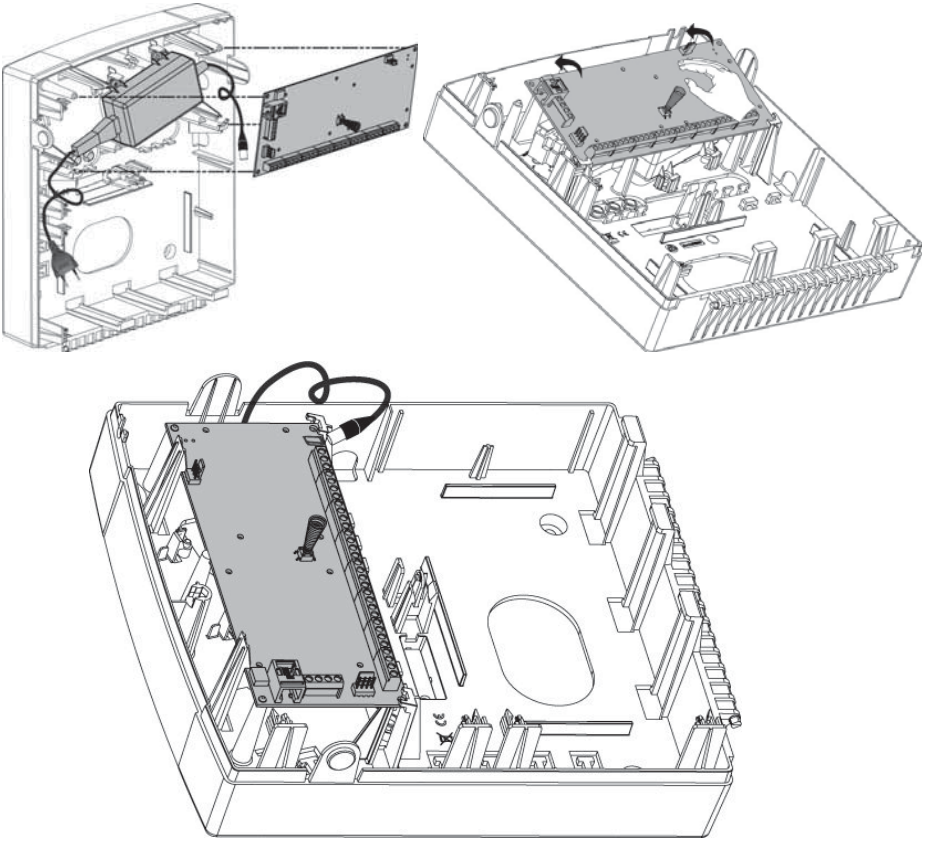

Figure 2-4 Placing the main panel

3. Wire all require expansion modules as described in *Chapter 3 Installing Bus Devices*.

## Main Board Wiring

The LightSYS main board provides plugs, connectors and peripheral module interfaces for all the principal functional expanders. In addition, its terminal connector block offers unparalleled ease and access to the full range of alarm functionality and the board includes communication ports for sound and digital data throughput

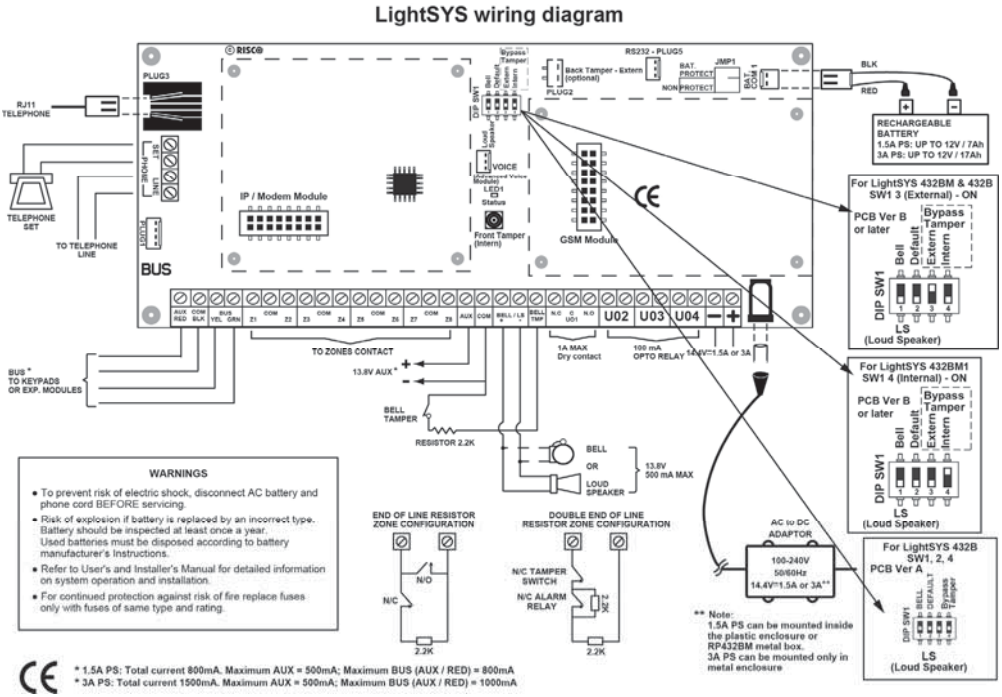


Figure 2-5: Main board wiring diagram

### Main Board — Bus Connection

Figure 2-6: Main board terminal block

The set of four terminals on the left of the terminal block represent the expansion bus. These terminals support the connection of keypads and expansion modules. The connections are terminal-to-terminal with color-coded wires, as follows:

AUX RED: +12V DC power  BUS YEL: Yellow data
COM BLK: 0V common  BUS GRN: Green data

Connect any/all keypads and expanders necessary for the installation using the bus connections. (Refer to the table of gauge sizes in *Appendix A Technical Specifications*.)

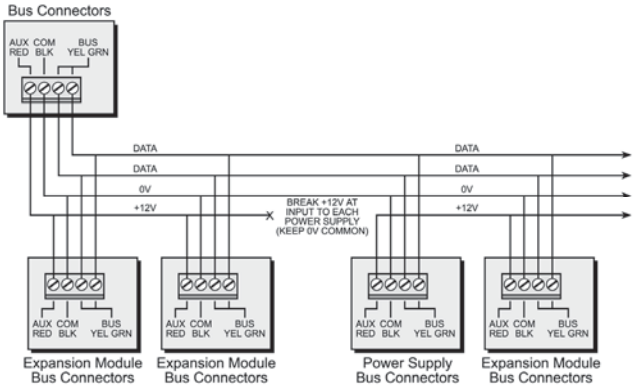


Figure 2-7: Terminal block bus connectors

**Notes:**

1. The parallel wiring system supports parallel connections from any point along the wiring.
2. The maximum wire run permitted is 300 meters (1000 feet) for all legs of the bus.
3. In case of bus communication problems, connect two 2.2KΩ resistors, one at each end of the data bus terminals, between the green and yellow wires.
4. **If connecting remote power supplies, do NOT connect the Red wire (+12v) between the Power Supply Unit and LightSYS.**
5. For long cable runs, please use the correct cable as stated in *Appendix A Technical Specifications*

## Zone Inputs Wiring

The following diagrams illustrate the various zone connections to the main unit or to the 8 wired zones expander and possible 4-wire smoke detector.

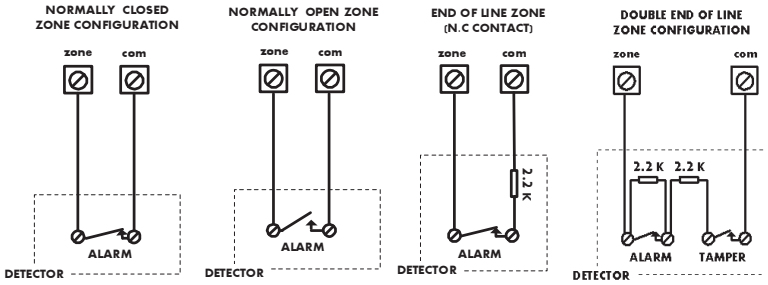


**Notes:**

1. For a zone with a tamper switch, you can use a double end-of-line resistor to save additional main panel connections.

2. It is recommended that you use an end-of-line resistor at the far end of each hardwired zone (16 x 2.2K resistors are supplied).
3. In the LightSYS you have the ability to define separately the end-of-line resistance of the zones on the main unit and of the wired zones for each eight-unit expander block (Quick key ②①③). Selection is done by the software with the following available options:

| ID | EOL | DEOL | ID | EOL | DEOL |
|---|---|---|---|---|---|
| 0 | Customized | | 7 | 4.7K | 4.7k |
| 1 | 2.2K | 2.2K (Default) | 8 | 3.3K | 4.7K |
| 2 | 4.7K | 6.8K | 9 | 1K | 1K |
| 3 | 6.8K | 2.2K | 10 | 3.3K | 3.3K |
| 4 | 10K | 10K | 11 | 5.6K | 5.6K |
| 5 | 3.74K | 6.98K | 12 | 2.2K | 1.1K |
| 6 | 2.7K | 2.7K | 13 | 2.2K | 4.7K |

## Wiring Auxiliary Devices

Use the **Auxiliary Power AUX (+) COM (-)** terminals to power PIRs, glass-break detectors (4-wire types), smoke detectors, audio switches, photoelectric systems and/or any device that requires a 12V DC power supply.

1.5A PS: Total current 800mA; Maximum AUX terminal = 500mA; Maximum BUS (AUX/RED) = 800mA

3A PS: Total current 1500mA; Maximum AUX terminal = 500mA; Maximum BUS (AUX/RED) = 1000mA

**Notes:**

- If the auxiliary outputs are overloaded (exceed 800mA) and are shut down, you must disconnect all loads from the outputs for a period of at least 10 seconds before you reconnect any load to the auxiliary outputs.
- LightSYS supports 4-wire smoke detectors. To connect a 4-wire smoke detector or device that requires resetting after an alarm condition, connect the auxiliary power AUX and output terminals. Use a power supervision relay to supervise the 4-wire smoke detectors. Loss of power to the detector(s) de-energizes the relay, causing a break in the zone wiring and a “Fire Fault” message at the panel. Remember to define the Output as Switched Auxiliary.
- In addition, when connecting a 4-wire smoke detector, observe the wiring guidelines mentioned in the previous sections, along with any local requirements applicable to smoke detectors, as per the following diagram:

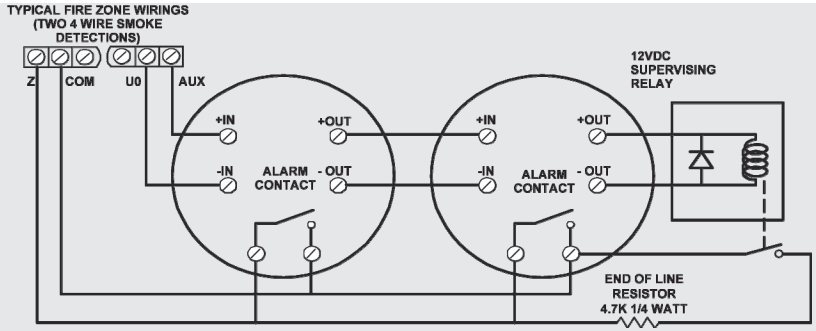


- To prevent a possible drop in voltage due to current requirements and distances involved, make sure to use the appropriate wire gauge (refer to the table of gauge sizes in) *Appendix A Technical Specifications.*
- To increase your power supply when employing multiple auxiliary devices, you can use the optional power supply expansion module (refer to the Wiring Power Supply Expansion Modules section, page 39)

## Wiring Internal Bell

The **Bell/LS** terminal provides power to the internal siren. When connecting an internal sounding device, pay attention to the polarity.
It is important to position the BELL/LS DIP switch SW1 (see p. 31) correctly. The position varies depending on the type of internal siren.
A maximum of 500mA may be drawn from this terminal.

**Note:**

To avoid bell loop trouble, if no connections are made to an internal siren, use a 2.2KΩ resistor in its place.

## Wiring Bell Tamper

Connect the bell tamper to the BELL TMP and COM terminals on the main panel using 2.2KΩ resistor in serial.

**Important:**

If you DO NOT use the terminal TMP BELL, remember to connect a 2.2KΩ resistor (Resistor colors: Red, Red, Red) between TMP and COM.

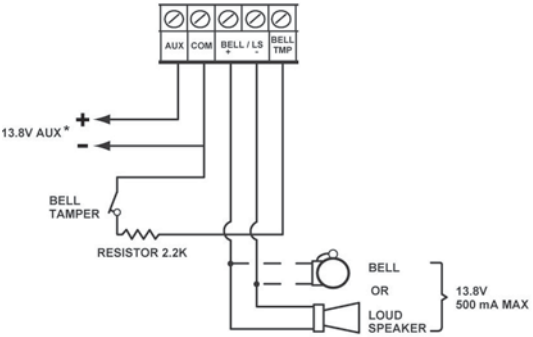


+ BELL: To connect to the self activated bell's (SAB) positive hold off input.

- LS: To connect to the SAB negative hold off input.

BELL TMP: To connect to the bell input of the SAB Unit.

## Wiring Utility Outputs

The LightSYS utility outputs support a variety of power-line device activation, whether resulting from: time dependency, external input, or device sensor. As detailed in Chapter 4, *3 Outputs,* you can program customized device activation powerfully and granularly.

For additional details, see page 36.

➢ **To wire Utility Output 1:**

Utility output 1 can be used to activate a self-powered siren or any other self-powered device.

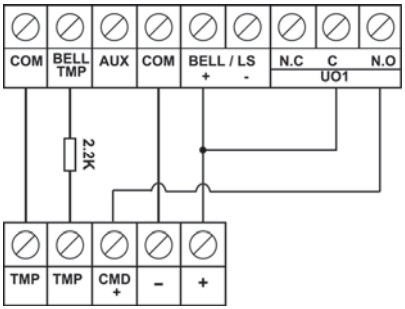


Figure 2-8: Wiring U01 for self-powered device

➢ **To wire Utility Outputs 2-4:**

Connect the device to the UO's as illustrated below:

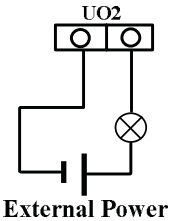

## Back Tamper (Optional)

The back tamper switch is an optional feature that provides an extra safeguard. In the event that the LightSYS is removed from the wall, the screw causes the perforated section of the plastic and attached tamper mechanism metal plate to break and remain attached to the wall. As a result, the back tamper switch is released and an alarm is generated. For this feature to operate:

1. Slide the tamper mechanism (from the right) onto the placement struts and click into place. The metal lip extends to the screw mounting hole.
2. When the LightSYS housing box is screw attached to the wall, also screw attach the tamper hole and abutting tamper metal lip (to the mounting bracket you inserted in step 2 on page 18)
3. Attach the tamper wires to PCB main board PLUG2 (p. 29).

The back tamper switch is located on the rear side of the back panel and is constantly depressed by the section shown in Figure 2-9

**Note:**

If the installation does not include the tamper mechanism, set DIP switch 4 to ON. (see page 31)

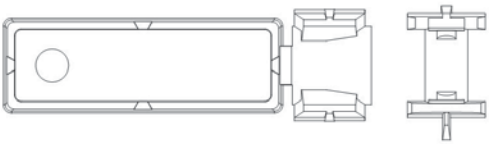

Figure 2-9: Perforated Back Tamper Release

## Connecting a telephone line to the LightSYS

1. Connect the incoming telephone line to the main panel's PHONE LINE terminals.
2. Connect any telephone on the premises to the PHONE SET terminals or to the optional PLUG3 jack RJ11 .

**Note:**

To ensure line seizure capability, and comply with FCC part 68 regulations, the equipment must be connected directly to the Phone company lines ('CO'). Whether connected via RJ11 or terminal block, the line port must be connected to the CO lines without any other phones or other telecom equipment between them. Other telecom equipment can be connected only after (in series) the alarm.

## Placing the Communication Modules

### GSM/GPRS

➢ **To activate the GSM/GPRS Module**

1. Place the optional GSM/GPRS communication board (mounted on its cylindrical placement struts). See Figure 2-10.
2. Insert the dedicated SIM card and, if required, enter the enabling PIN code or disable the SIM PIN Code in advance by placing it in a cell phone and disabling the code.

**Notes:**

- Ensure that you remember the PIN code. Usually, after three wrong attempts (recognized by the SIM card) to enter a PIN number, the SIM card will lock. You will have to contact your local cellular provider to unlock the SIM card.
- Important: Do not install SIM card while power is applied to the LightSYS.
- Do not touch SIM Card connectors! If doing so, you may release an electrical discharge that could damage the SIM card.
- Once the SIM card is placed it is recommended to test the operation of the SIM by conducting a call and testing the GSM signal strength. For more information refer to the programming menus of the GSM menu

3. Attach the antenna plate and slide it into its right-wall housing. (See Figure 2-10)

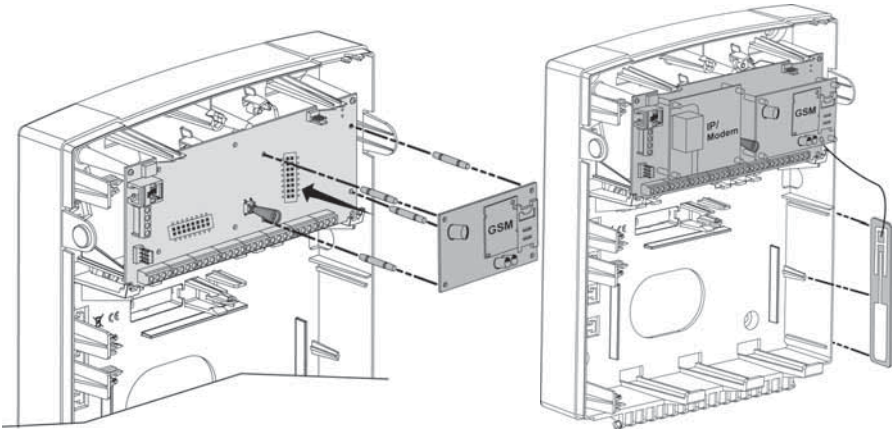


**Note**: For mounting GSM inside a metal enclosure, refer to the instructions supplied with the box

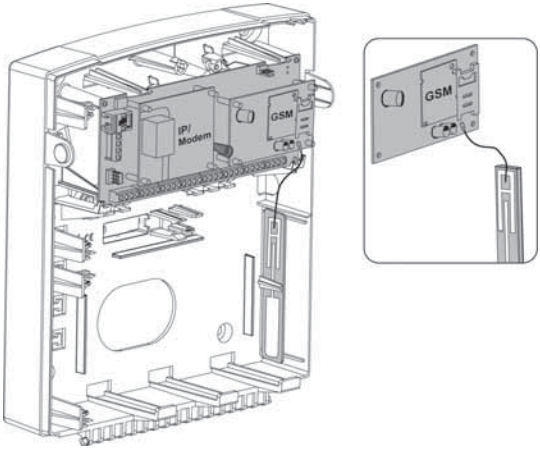


Figure 2-10 Placing the GSM/GPRS panel and antenna

## Plug-in IP

➢ **To activate the Plug in IP Module**

1. Place the optional IP communication modem (mounted on its cylindrical placement struts) as illustrated in Figure 2-11
2. Connect the incoming LAN cable in order to enable IP Communication. Make sure that the cable is connected to the network

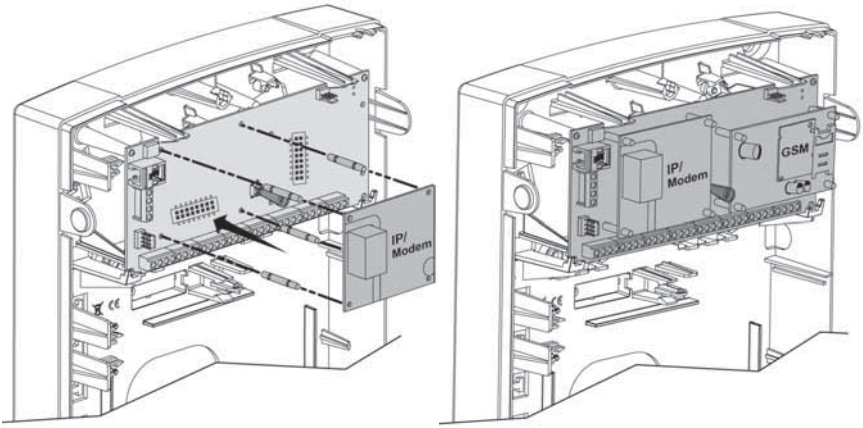


Figure 2-11 Placing the IP modem

### Plug-in Fast Modem 2400

➢ **To activate the Plug in Fast Modem 2400 Module**

Place the optional Fast communication modem (mounted on its placement struts) as illustrated in Figure 2-12

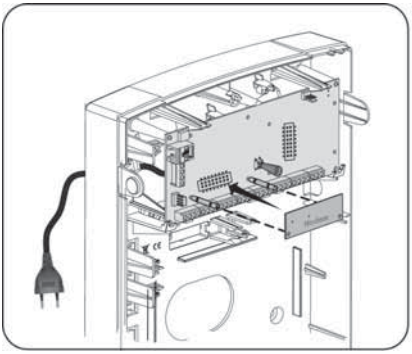

Figure 2-12 Placing the Fast communication modem

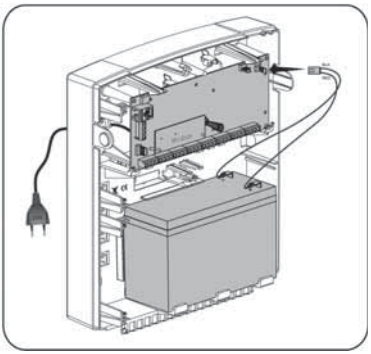

Figure 2-13 Placing the battery and attaching the plug

## Main Unit DIP Switch and Jumper Setting

### Plugs

| Plug | Description | Function |
|---|---|---|
| PLUG 1 | Bus Connector | Bus 4 pin plug for easy connection to the bus |
| PLUG 2 | Back Tamper | Used for the connection of the optional back tamper |
| PLUG 3 | Telephone | Used for a local telephone connection (same as the PHONE SET terminal) |
| PLUG 4 | Voice | Used to connect the Advanced Digital Voice Module (RP432EV) to the LightSYS.<br>Connect the Voice module to the VOICE connector (PLUG 4) on the main panel via the supplied cable. This connector transmits signals from the voice module to the telephone line during remote communication and is essential for normal operation of the voice module.<br> 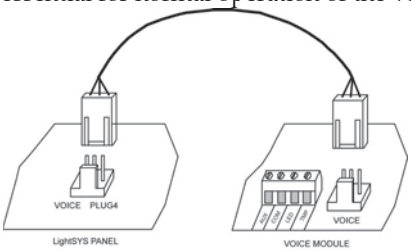 |
| PLUG 5 | RS-232 | Used for local communication with the configuration software. |

| | | |
|---|---|---|
| PLUG 6 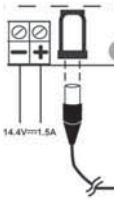  | | Use this outlet for connection to the RISCO supplied certified AC to DC adaptor.<br>**Note**: the Adaptor outgoing power cord can be cut for the plug and attached to the supplied terminal block fuse (See Figure 2-3) as per your local wiring requirements.<br>Additionally, input wiring can also be connected to LightSYS through the neighboring (–) and (+) terminal block connectors. |
| PLUG 7 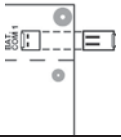 | Battery | Use this outlet to connect to the backup battery (not-supplied), of 12 volts and 7Ah |

## Jumpers

The LightSYS is equipped with an internal jumper to configure battery discharge protection. Use the following table to set the jumper.

| Position | Function |
|---|---|
| 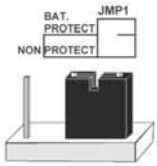  (Default) | Battery Discharge Protection is disabled; The battery may be totally discharged during continuous AC failure, thus battery replacement may be required (no deep discharge protection).<br>**Note:**<br>In this position, the LightSYS will start to operate from a battery power supply whether it is connected to the Mains or not. |
| | Battery discharge protection is activated: If a continuous AC power outage occurs, the LightSYS automatically disconnects the battery when its backup battery voltage drops below 10.05 VDC, in order to prevent "deep discharge" that may damage the battery.<br>**Note:**<br>In this position, the LightSYS will not start to operate from a battery power supply, unless connected to the Mains first. |

| Position | Function |
|---|---|
| **DIP switches** | Factory Default |
| **DIP Switch SW1** | **Status** |
| 1: Bell | **ON**: Bell: For bell or electronic siren with a built-in siren driver.<br>**OFF** (Default): For loudspeaker without a built-in sound driver. |
| 2: Default | **ON**: Resets installer, sub-installer and grand master codes to their default factory values and bypasses main unit front tamper alarm.<br>**OFF** (Default): Codes preserve their set values. |
| 3:Extern - Back Tamper Bypass | **ON**: Back tamper bypass is in effect. Use this setting during programming and if no back tamper has been connected to PLUG 2.<br>**OFF** (Default): No tamper bypass is in effect |
| 4: Intern. Front Tamper Bypass | **ON**: Front tamper bypass is in effect. Use this setting when the LightSYS is installed inside the metal enclosure RP432BM1.<br>**OFF** (Default): No tamper bypass is in effect. Use this option when back tamper is connected to the system |

* The settings of dipswitches 3 and 4 as described in this table are relevant only for LightSYS RP432M00000B and later

## Connecting Backup Battery

Insert the backup battery into its place and connect the leads to the main panel battery, PLUG7 (p. 30).

**Notes:**

- The main panel is designed to work with an approved 12 VDC, 7 Amp-hour sealed lead battery as a backup for the primary power supply in time of main power failure.
- The main panel is designed with reverse polarity protection on the battery charging circuit. However, prolonged improper connection of the battery to the main panel will result in damage.
- The battery is not supplied with the LightSYS.
- The LightSYS Rechargeable battery should be charged for at least 24 hours.
- Battery is checked every 1 minute.
- There is a risk of explosion if a battery is replaced with an incorrect type.
- Dispose of used batteries according to the proper instructions.
- Battery in product shall be replaced every 3-5 years. No maintenance is needed.
- The power should remain disconnected until all connections have been made and checked for accuracy
- Use the internal jumper (Jumper 1) to configure battery discharge protection. See page 30.

# Chapter 3 Installing Bus Devices

This chapter documents *Installing Bus Expanders*, p.34, including:


- *Keypads*, page 34
- *8 Zone Expander*, p. 34
- *Utility Outputs*, p. 36
- *Wireless Receiver*, p. 38
- *3A Switching Mode Power Supply*, p. 39
- *Sounders*, p. 46
- *Connecting Bus Detectors*, p. 47
- *Single Zone Expander*, p. 48.


For detailed information of each device refer to the manual supplied with the product.

## Bus connection

Each bus device has 4 bus terminals. The connections are terminal-to-terminal with color-coded wires, as follows:

AUX RED: +12V DC power  BUS YEL: Yellow data
COM BLK: 0V common  BUS GRN: Green data

Connect each bus device necessary for the installation using the bus connections.

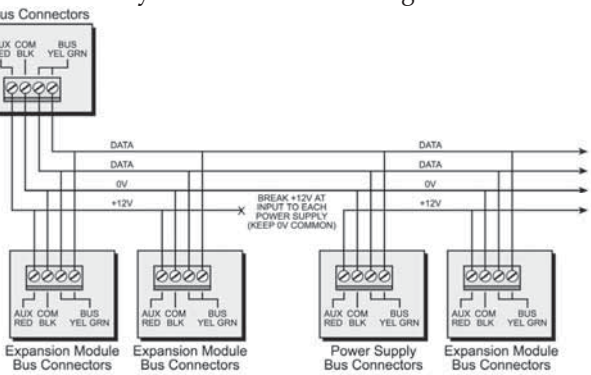


Figure 3-1: Terminal block bus connectors

**Notes:**

1. The parallel wiring system supports parallel connections from any point along the wiring.
2. The maximum wire run permitted is 300 meters (1000 feet) for all legs of the bus.
3. In case of bus communication problems, connect two 2.2KΩ resistors, one at each end of the data bus terminals, between the green and yellow wires.
4. **If connecting remote power supplies, do NOT connect the red wire (+12v) between the power supply unit and LightSYS.**
5. For long cable runs, please use the correct cable as per *Appendix A Technical Specifications*

## Setting Bus Accessory ID Numbers

For most devices, a DIP switch number must be set to identify its ID category number. Devices are split into 'Families'. Each 'Family' of devices has sequential identification numbers which are set by the DIP switches. Before setting power on, define each module's ID number by setting the DIP switches as follows:

| ID | DIP switches | | | | |
|---|---|---|---|---|---|
| | 1 | 2 | 3 | 4 | 5 |
| 01 | OFF | OFF | OFF | OFF | OFF |
| 02 | ON | OFF | OFF | OFF | OFF |
| 03 | OFF | ON | OFF | OFF | OFF |
| 04 | ON | ON | OFF | OFF | OFF |
| 05 | OFF | OFF | ON | OFF | OFF |
| 06 | ON | OFF | ON | OFF | OFF |
| 07 | OFF | ON | ON | OFF | OFF |
| 08 | ON | ON | ON | OFF | OFF |
| 09 | OFF | OFF | OFF | ON | OFF |
| 10 | ON | OFF | OFF | ON | OFF |
| 11 | OFF | ON | OFF | ON | OFF |
| 12 | ON | ON | OFF | ON | OFF |
| 13 | OFF | OFF | ON | ON | OFF |
| 14 | ON | OFF | ON | ON | OFF |
| 15 | OFF | ON | ON | ON | OFF |
| 16 | ON | ON | ON | ON | OFF |

| ID | DIP switches | | | | |
|---|---|---|---|---|---|
| | 1 | 2 | 3 | 4 | 5 |
| 17 | OFF | OFF | OFF | OFF | ON |
| 18 | ON | OFF | OFF | OFF | ON |
| 19 | OFF | ON | OFF | OFF | ON |
| 20 | ON | ON | OFF | OFF | ON |
| 21 | OFF | OFF | ON | OFF | ON |
| 22 | ON | OFF | ON | OFF | ON |
| 23 | OFF | ON | ON | OFF | ON |
| 24 | ON | ON | ON | OFF | ON |
| 25 | OFF | OFF | OFF | ON | ON |
| 26 | ON | OFF | OFF | ON | ON |
| 27 | OFF | ON | OFF | ON | ON |
| 28 | ON | ON | OFF | ON | ON |
| 29 | OFF | OFF | ON | ON | ON |
| 30 | ON | OFF | ON | ON | ON |
| 31 | OFF | ON | ON | ON | ON |
| 32 | ON | ON | ON | ON | ON |

**Notes:**

- Most accessories have four DIP switches, while bus detectors have five DIP switches
- IDs 9–32 are only available for bus detectors.
- **If a DIP switch is changed on any device, it is necessary to shut down the device's power and then re-power it**.

The first module in each category is defined as ID= 1.

Families that have sequential ID numbers are:

- Keypads (LCD, LCD with proximity and wireless keypad)
- Zone expanders (8 zones expander, bus zone expander)
- Outputs (4 relay output expander, 8 open collector output expander, 2 relay output expander on 3A power supply, 2 relay output expander on Wireless zone expander, X-10 Outputs)
- Power supplies (3A switching mode power supply)
- Bus zones WL zone expanders

**Notes:**

1. The main unit can support a maximum load of 1.4 Amp. If more current is required, install additional power supply modules (3 Amp max.).
2. On 3 Amp supervised power supplies and on the wireless expander, there are two programmable outputs. These programmable outputs belong to the 'Output' family. These outputs have dedicated DIP switches that identify the OUTPUT ID.

| Device Type | Max. Total |
|---|---|
| Wired / Bus Expanders | 3 |
| Bus Zones | 32 |
| WL Zone Expanders | 2 |
| Bus Zones Expanders | 4 |
| Outputs Expanders | 4 |
| Keypads | 4 |
| 3A Power Supply | 4 |
| Bus Sirens (ProSound / Lumin8) | 4 |

## Installing Bus Expanders

### Keypads

The LightSYS supports several types of keypads. Up to 4 bus keypads can be assigned to the LightSYS.

Model RP128KCL

Model:RP432KP

Model: RP128KP

➢ **To install LightSYS bus keypads**

1. Open the keypad cover
2. Set ID DIP switches
3. Connect the keypad to the bus.
4. Set the back tamper switch ( Only in model RP128KP)
5. Adjust the brightness and contrast of the LCD keypad using a trimmer located next to the dipswitches. (Model RP128KCL). In models RP128KP and RP432KP it is done by pressing and holding [OK].
6. Close the keypad

### 8 Zone Expander

The LightSYS Zone Expander (model RP432EZ8) enables you to expand with up to three additional 8-zone expander boards (for a total of 32 sensor devices) connected to your LightSYS security system.

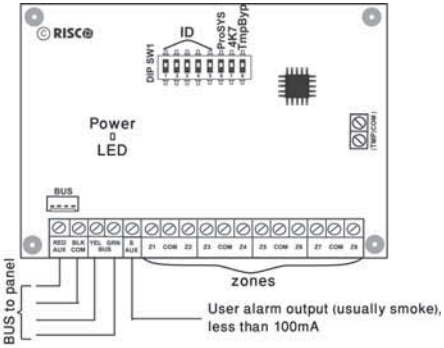


Figure 3-2: Zone Expander board and mounting diagrams

➢ **To install the 8-zone expander**

1. Set DIP switches as follows:

| Switch | Description |
|---|---|
| Switch 1-5 | Defines the Zone Expander ID number. |
| Switch 6-7 | Not Applicable |
| Switch 8: Tamper bypass | Instead of a short between the TMP/COM terminal block |

2. Wire the zone expander to the bus
3. Wire the zones terminals as follows:
   a. Connect up to eight hardwired zones, using twisted-pair or 4-conductor cable wiring.
   b. Connect each zone to the appropriate Zone (Z) terminal and its related COM terminal. Each pair of zones shares a COM terminal. For example, Z1 and Z2 share a COM terminal, as do Z3 and Z4, and so on.

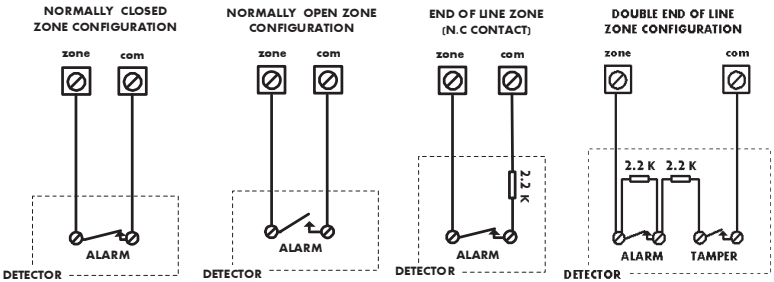


4. Supply power to auxiliary devices. Refer to Wiring Auxiliary Devices, p. 23)

**Note:**

The RP432EZ8 enables to define the end-of-line resistance of its zones. Selection is done through the Quick key programming: ②①③.

5. Mount the zone expander in either of the LightSYS box left-slots:

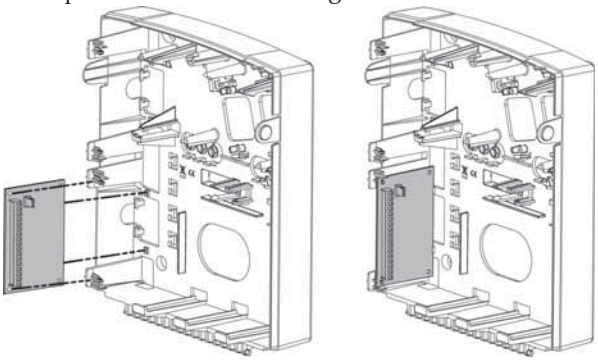

Figure 3-3: Zone Expander mounting location inside the LightSYS box

## Utility Outputs

The LightSYS utility outputs support a variety of device activation, based on periodicity or system event. As detailed in Chapter 4, *Using the Installer Programming Menus* ③ *Outputs* , you can program customized device activation powerfully and granularly.

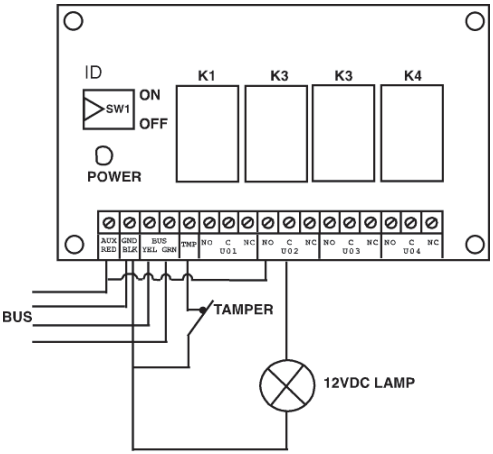


Figure 3-4: Utility Output Module UO4 (Showing an Example of UO4 Wiring)

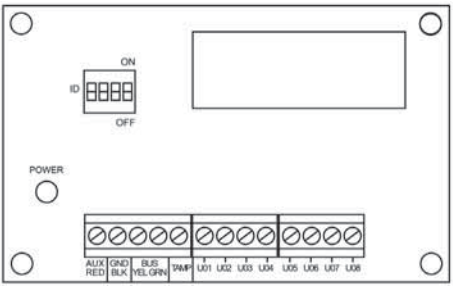


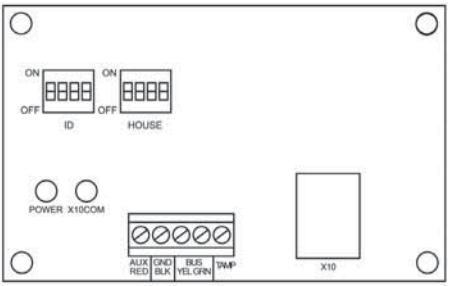

Figure 3-5: Utility Output Module E08 Figure 3-6: Utility Output Module X-10

**Notes:**

Outputs on module EO8:
Current consumption: 25 mA, typical / 30 mA, maximum;
Contacts; 12V Open Collector, Active Pull-Down, 70 mA, maximum
Outputs on module EO4:
Current consumption 25 mA, typical / 140 mA, maximum;
Contact rating: 5 A / 24V DC.

➢ **To install the utility output expanderss:**

1. Set the output expander ID using the ID DIP switches.
2. Wire the UO expander to the bus.
3. Connect the devices to the output terminals as follows:
   a. UO4 – Relays (see Figure 2-8 and Figure 3-4)
   b. UO8 – Open collectors:

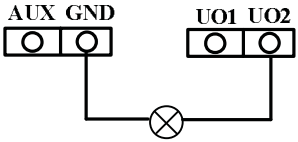


   c. X10:
      i. Connect an RJ25 cable (4-wire telephone cable) between the RJ11 connector on the X-10 module and the X-10 transmitter.
      ii. Plug the X-10 transmitter into the AC power.
      iii. Plug the X-10 receiver into the AC power close to the device that will be operated.
      iv. Connect the X-10 receiver to the device

4. Mount the Utility Output Expansion Modules in the main panel cabinet, depending on space availability or in a separate cabinet (see Figure 3-3) .
5. If the Utility Output expansion module is mounted in a separate cabinet you can use the TAMP and COM terminal to tamper the cabinet, as follows:
   Connect one (or more) normally open (NO) momentary-action pushbutton switches in a series between the TAMP and COM terminals in order to short-circuit these terminals while the cabinet door is closed.

**Note:**

It is not necessary to use a tamper switch if another module sharing the same cabinet is equipped with one.
Do NOT use an End-of-Line Resistor in the tamper switch circuit.
If a tamper switch is not used, connect a wire jumper between the two terminals.

## Wireless Receiver

Up to two Wireless bus expanders (model WL432) can be assigned to the LightSYS.

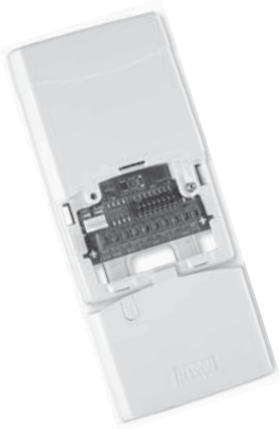

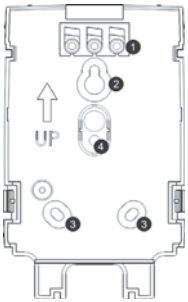


WL Receiver Mounting Bracket

1. Screw cap
2. Upper mounting hole
3. Lower mounting holes (optional)
4. Wall tamper hole

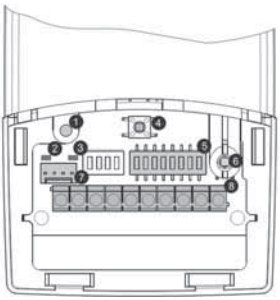


1. Optional screw hole (used to fasten front and back covers)
2. Red LED
3. Green LED
4. Prog button
5. DIP switch
6. Box tamper
7. Bus Connector
8. Terminal block

Figure 3-7: Wireless Receiver

➢ **To install the wireless receiver**

1. Separate the mounting bracket from the main unit.
2. Use the mounting bracket as a marking template.
3. Tear off screw caps, as needed for covering front screw hole.
4. Mount the bracket to the wall.
5. Open the wireless receiver front cover.
6. Set DIP switches as follows:

| Switch | Description |
|---|---|
| **SW1- SW3** | 3 switches to set ID of the wireless receiver. |
| **SW4 – SW6** | 3 switches to set ID of the 2-output expander. |
| **SW7**: | UO expander Enable/Disable<br>**Off**: Disable<br>**On**: Enable |
| **SW8** | Receiver operational mode<br>**Off** : Bus mode<br>**On**: Stand alone mode |

7. Wire the wireless expander to the bus.
8. Connect the devices to the outputs terminals (12VDC @ 1A max Dry Contact Relays). See Figure 2-8 and Figure 3-4
9. Mount the wireless receiver to the mounting bracket.
10. Close the mounting screw
11. Close the front cover. Use the screw cap you tore on Step 3 on the rear side.

**Note:**

For additional programming and configuration instructions, see 5IN1424 Wireless Receiver 432 Installation instructions

## 3A Switching Mode Power Supply

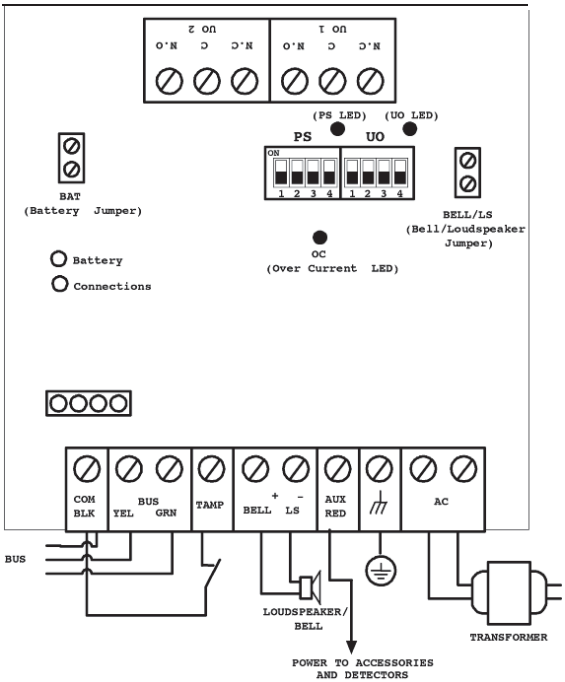


Figure 3-8: SMPS –General View

➢ **To mount the 3A Switching Mode Power Supply (SMPS)**

1. Mount the SMPS and the backup battery inside a metal box.

**Important:**

The SMPS should be serviced by qualified personnel only!
Unless serviced, the SMPS box must be closed with screws at all times!
Use only safety-approved wires in accordance with the national rules.
The SMPS is designed for indoor use only!

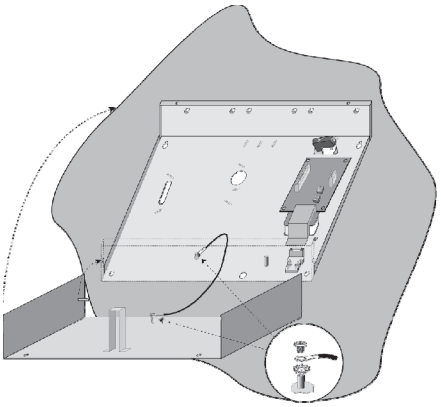

Figure 3-9: SMPS Inside a Metal Box

**Note:**

Prior to installation, calculate the total current consumption of the connected devices in order not to exceed the power supply's maximum current consumption!

**Important:**

To prevent risk of electric shock, disconnect all power sources before servicing! Under no circumstances should mains be connected to the PCB other than to the main terminal block!

2. Locate the SMPS metal box in a clean and dry location, close to the mains.
3. Open the SMPS box by releasing the attaching screws.
4. When attaching the box to the wall, it is recommended to use Ø4.2mm, 32mm length screws (DIN 7981 4.2X32 ZP)
5. Connect the incoming mains cable to the main fuse terminal block.
6. Wire the SMPS terminals as follows:
   a. **Connect the bus Terminals**: Connect only three of the first four terminals at the left of the Power Supply expansion module to the main panel's 4-wire bus, as follows

| | Expansion Bus Terminals | | |
|---|---|---|---|
| | **COM** | **BUS** | **BUS** |
| **Color** | BLK (Black) | YEL (Yellow) | GRN (Green) |

**Important:**

Do NOT make any connection to the AUX (RED) terminal from the main panel. It is used for the outgoing bus to supply voltage to other modules.

**Notes:**

The power supply expansion module is connected to the AC power supply. This module, therefore, supplies power to all modules and/or keypads located AFTER the point that it is connected to the bus.

b. **Set the Tamper (TAMP COM):** The power supply expansion module can be contained in a metal cabinet. Tamper the cabinet, as follows: Connect one (or more) normally open momentary-action pushbutton switches in a series between the TAMP and COM terminals.

**Notes:**

1. It is not necessary to use a tamper switch if another module sharing the same cabinet is equipped with one.
2. Do NOT use an end-of-line resistor in the tamper switch circuit.
3. If a tamper switch is not used, connect a wire jumper between the two terminals.

c. **BELL/LS (+) (-):** Used to connect an external sounder driven by the SMPS (bell or loudspeaker). Position the Bell/LS jumper respectively for the connected device as described in the Jumper Settings section below.

**Notes:**

1. To avoid bell loop trouble, if NO connection is made for the BELL/LS terminals, connect a 2.2KΩ resistor in its place.
2. Use a larger wire gauge if the distance between the sounder and the SMPS is significant. Take the sounder(s) current draw into account when selecting a wire gauge (see Appendix C, page 195).
3. Any internal siren(s) connected to the power supply expansion module will operate exactly like the siren(s) connected to the main panel

d. AUX RED(+)**:** Used together with the COM (-) terminal to apply power to Aux. devices (e.g. PIRs, smoke/glass break detectors and any other devices that require 12VDC power supply). Total current consumption from the SMPS (Via The Aux./COM and BELL/LS terminals) is 3A

**Notes:**

If one or more of the AUX/BELL/LS outputs is overloaded and the SMPS shuts down, the SMPS must be reset, using the LightSYS software as follows: (User menu > Activities > Advanced > Overload Restore option, or enter and exit the installation-programming mode. If overload still exists, perform manual reset as follows:
Disconnect all loads from the AUX/COM terminals for at least 10 seconds before you reconnect any load to the AUX/COM terminals. Then perform Overload Restore again from the LightSYS user menu.

e. GROUND (Earth): Used to connect the GND terminal to the main box ground pin (see illustration below). Use 16 AWG (at least).

f. AC**:** Used for connection of the AC terminals (see illustration below) to the transformer outputs (16.5VAC/50 VA).

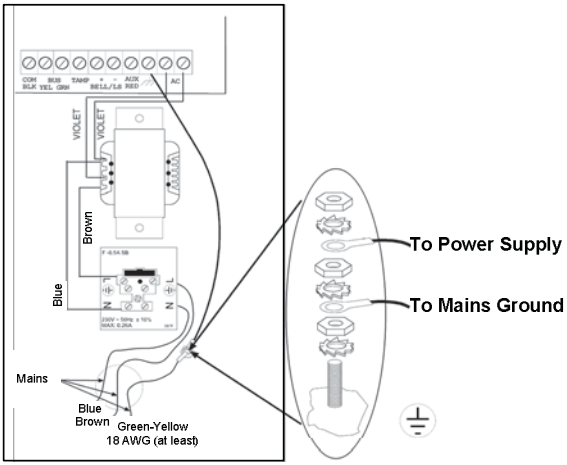


Figure 3-10: SMPS – AC & Ground Connection

7. Set the SMPS jumpers and the DIP switches as follows:

| Mod-ule | DIP switch | Description |
|---|---|---|
| Power Supply | PS/SW1-SW3 | Used to set a unique ID number for the bus module for communication purposes. |
| | PS/SW4 | Enables/disables Power Supply – LightSYS communication.<br>**On** (up): Communication enabled.<br>**Off** (down): Communication disabled |
| Utility Output | UO/ SW1-SW3 | Used to set a unique bus ID number for the UO module located on the SMPS board. |
| | UO/SW4 | Enables/disables UO module – LightSYS communication.<br>**On** (up): communication enabled.<br>**Off** (down): communication disabled |

**Note:**

When PS/SW4, or UO/SW4 is Off, the ID number defined by SW1-SW3 is not recognized by the LightSYS and can be used for the connection of another accessory of the same category. The UO/PS LED will flash since there is no communication with the main panel.

| Jumper | Description | |
|---|---|---|
| BAT | Battery discharge protection | |
| | Protection ON | If a continuous AC power outage occurs, the SMPS automatically disconnects the battery when its backup battery voltage drops below 10.8VDC. This is done to prevent "deep discharge" that may damage the battery. |
| | Protection OFF | The battery may be totally discharged during continuous AC failure (no deep discharge protection). |
| | **Note:** If 2 pins configuration is selected, the battery might be damaged may be required. | |
| Bell/LS | Used to determine the SMPS mode of operation in accordance with the sounder device connected to the BELL/LS terminals. **Note:** The sounder(s) connected to the SMPS operates identically to the panel's sounder(s). | |
| | Bell | For a bell/electronic siren with a built-in siren driver, position jumper on one pin; 12VDC is produced at the sounder's terminals during burglary/panic alarms. Slow pulsing voltage is produced during fire alarm. |
| | LS (Speaker) | For a loudspeaker without a built-in siren driver, position jumper on both pins. The SMPS produces continuous oscillating voltage for burglary/panic alarms and an interrupted oscillating voltage for fire alarm. |

8. Locate the battery at the bottom of the SMPS box.
9. Connect flying leads (battery connectors) from the SMPS board to the battery terminals - (+) Red, (-) Black).

**Note:**

Use only lead acid battery type, rated 12V, 7-21AH (maximum) and safety approved in accordance with the national standards!

## Digital Voice Module

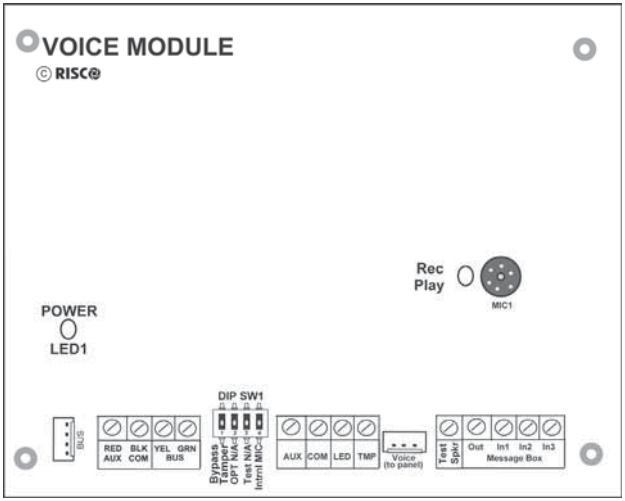


Figure 3-11: Voice Module PCB

➢ **To mount the voice module:**

1. Set the voice module DIP switches as follows:

| Switch | Description | Usage |
|---|---|---|
| 1 | Bypass tamper | Instead of a short with the TMP/COM terminal block |
| 2 | OPT | Not in use |
| 3 | Test | Connected in parallel to all output channels and enables to listen to all played messages using a speaker (at least 32 Ohm) connected between the Test Spkr and COM terminals |
| 4 | Intern Mic | Select an external or internal microphone for recording messages:<br>**On**: Recording messages from the microphone located on the Voice module board.<br>**Off**: Recording messages from a microphone located on Listen / Talk unit (IN1 terminal) |

2. Wire the voice expander as follows:

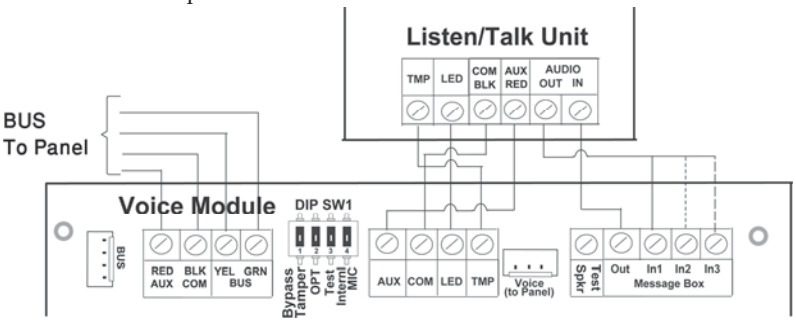


Figure 3-12: Voice Module — Listen/Talk Unit Wiring

a. Bus connection: The connection to the main bus can be made through the terminals of the module voice AUX (RED), COM (BLK), BUS (YEL) and BUS (GRN) as illustrated or through the bus (PLUG1) using the supplied 4-wire cable.

b. If required, connect the Listen/Talk unit as illustrated in the diagram above.

c. Connect the Voice module to the VOICE connector on the LightSYS main panel (PLUG 4) via the supplied cable, as illustrated below. This connector transmits signals from the Voice module to the telephone line during remote communication, and is essential for normal operation of the Voice module.

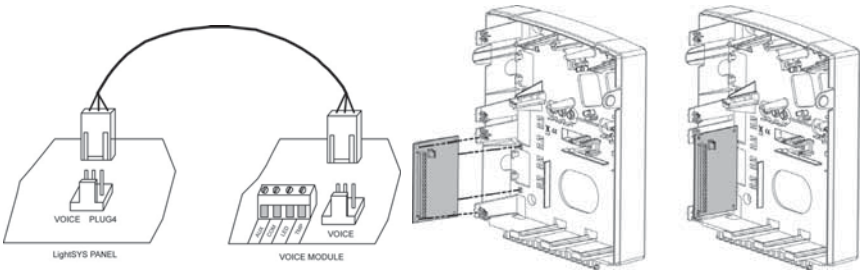


3. Mount the Voice module inside the plastic enclosure with the LightSYS main panel in order to make a connection between the two units. (as above)

4. Mount the Listen/Talk unit. Mount the unit in a place where Listen - In operation is to be performed.

## Sounders

For detailed information of installation the bus Sounders (ProSound or Lumin 8) refer to the manuals supplied with the products

### ProSound

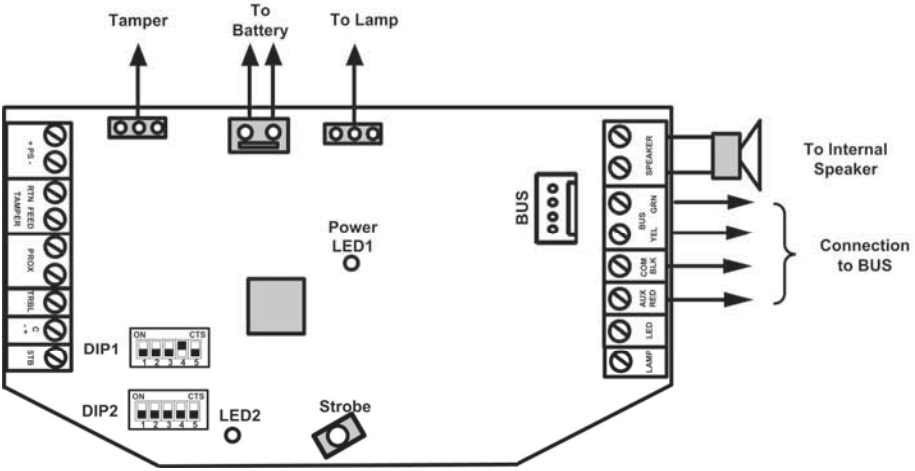


Figure 3-13: ProSound Bus Wiring

➢ **To install LightSYS-compatible bus sounders**

1. Connect the siren according to Figure 3-13.
2. Set the related DIP switches for bus mode operation.
   a. Set DIP switch **DIP 1:SW4** should be in ON position for ProSound bus connection
   b. DIP switch **DIP 1:SW5** : Defines the siren sound rhythm (ON = Slow, Off = Fast)
   c. DIP switch **DIP 1:SW1-3**: Set ID Bus Number. Up to 4 sirens can be connected to the LightSYS.
   d. DIP switch **DIP** 2:**SW2**: Set different siren sound

**Notes:**

- ❖ The sounder will not operate when a battery is not connected or no power supply is connected to the PS terminals.
- ❖ After powering-up the sounder, it will not operate for a period of 20 seconds (sound and strobe) in order to avoid accidental activation during installation.
- ❖ After powering-up the sounder, the sounder inputs (C+/C-) will cause activation only if they have been in normal (silent) state at least for 10 seconds.
- ❖ The PROX and TRBL outputs are deactivated in bus mode configuration.
- ❖ To protect the battery against deep discharge, the battery will be automatically disconnected below 10.5 VDC.

**Lumin 8**

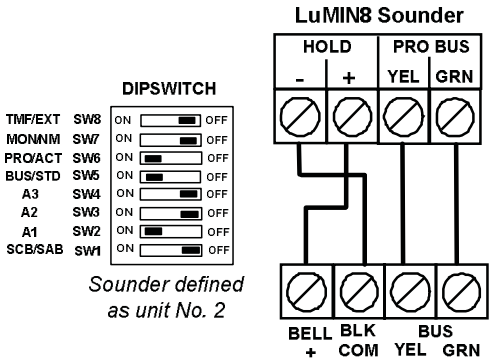


## Connecting Bus Detectors

Up to 32 addressable bus detectors can be assigned to the LightSYS. Bus detectors can be wired to the main bus or to a Bus Zone Expander (BZE).
For full installation instructions refer to the instructions supplied with each bus detector.

➢ **To connect bus detectors to the main LightSYS bus**

1. Set the bus detector ID number (1-32) using the detector's DIP switches.

   **Note:**
   For WatchOUT, LuNAR, and WatchIN set the switch that defines the detector operation mode to bus mode.

2. Wire the bus terminals AUX(RED), COM (BLK), BUS (YEL) and BUS (GRN) to the LightSYS bus.

   **Note:**
   For maximum operation stability, it is best NOT to exceed a total 300 meters (1000 feet) of wiring from the bus detector to the LightSYS panel.

➢ **To connect bus detectors using a Bus Zone Expander (BZE)**

**Important Note:**
Connecting bus zones to the LightSYS using the bus zone expander can only be done using Bus Zone Expander version B and later, PN RP128EZB000B.

1. Set the BZE ID number (1-3) using the DIP switches SW1 1-3.
2. Set the BZE SW2-3 to **ON** position.
3. Wire the BZE terminals marked as **TO PANEL** to the LightSYS bus.
4. Set the bus detector ID number (1-32) using the detector's DIP switches.

**Note:**
Do not repeat the same ID twice on the same BZE.

5. Wire each detector's bus terminals to the relevant BZE's terminals marked as **TO DEVICE**.(see figure below)

**Note:**

For maximum operation stability, it is best NOT to exceed a total of:
300 meters (1000 feet) of wiring from the BZE to the LightSYS panel.
300 meters (1000 feet) of wiring from the BZE to the last bus detector.

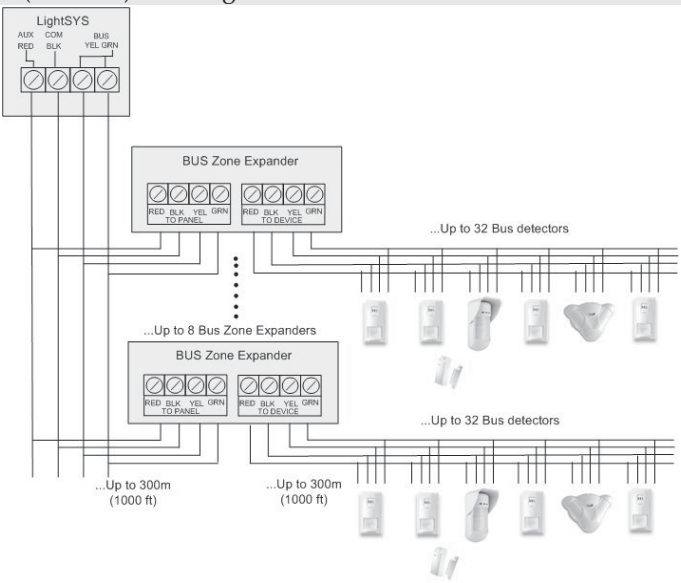


When connected to LightSYS the Bus Zone Expanders can be defined to support 32 bus zones. UP to 4 Bus Zones Expanders can be connected to the LightSYS .

## Single Zone Expander

The RISCO RP128EZ01 is a Single Zone Expander that enables to connect any detector to RISCO system BUS. Using the BUS connection you can ease your installation by connecting any detector in parallel connections from any point along the wiring route. In addition you can define any detector with one of the following zone terminations supported by the panel: NO, NC, EOL, DEOL.

- **To connect the RP128EZ01 to the LightSYS bus**

**Note:**

Up to 32 Single Zone Expanders can be installed on the LightSYS.

1. Set the RP128EZ01 ID number (1-32) using DIP switches 1-5.
   - SW1 (1 - 5): ID switches. Defines the Single BUS Zone Expander ID number
   - SW1 - 6: Not used
2. Wire the RP128EZ01 BUS wires Red, Black (COM), Yellow(BUS) and Green (BUS) to the LightSYS BUS.

**Note:**

For maximum operation stability, it is best NOT to exceed a total of 300 meters (1000 feet) of wiring from the BZ1 to the LightSY panel or to the BUS Zone Expander

➢ **Wiring RP128EZ01 to the Main BUS**

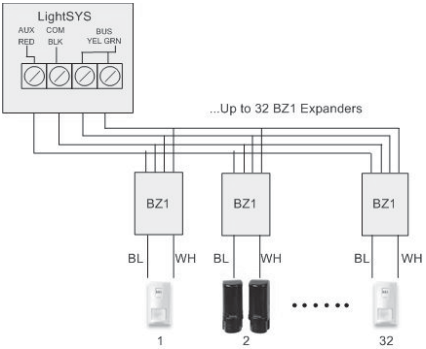


➢ **Wiring RP128EZ01 to BUS Zones Expanders**

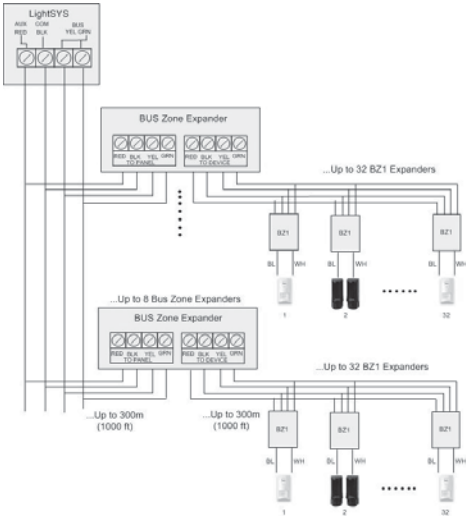


**Notes:**

When connecting RP128EZ01 to a BUS Zone Expander wire the RP128EZ01 wires to the relevant BUS zone expander's terminals marked as TO DEVICE.

3. Wire the RP128EZ01 zone wires, Black and White, to the detector's terminals according to the required termination.

**Notes:**

The Black and White wires are equivalent to zone input terminals in the LightSYS.

## Completing the Installation

➢ **To complete the installation**

1. Mount the back panel to the wall using affixing screws
2. Connect the system to the mains power

**Note:**

If no back tamper is connected set SW1-4 to ON position to avoid tamper alarm

3. Close the front cover and close the locking screw
4. Upon completion of LightSYS bus device installation, module wiring, and DIP switch and jumper setting, proceed to *Chapter 4 Installer Programming* and *Chapter 5 Using the Installer Non-Programming Menus*

# Chapter 4 Installer Programming

## Programming Methods

Program the LightSYS through one of three methods:

- Configuration Software (Local or remote)
- **Program Transfer Module** (PTM)
- LCD Keypad

### Configuration Software

A software application that enables you to program the LightSYS from a PC computer. It offers the following alternatives:

- Working locally, through a portable computer connected to the LightSYS via cable
- Working at a remote site, communicating with the LightSYS via one of the following options:
  - A phone line and modem
  - TCP/IP network using the IP Module
  - GPRS using the GSM/GPRS communication module

For further information on programming the LightSYS via the Configuration Software, refer to the *Configuration Software* manual.

### PTM: Data Storing Device

The PTM is a tiny circuit board into which the LightSYS panel can transmit a copy of the system's configuration. The PTM stores this copy and can also transmit the configuration information back to the LightSYS panel.

➢ **To copy from a programmed main panel into the PTM:**

1. Position the PTM on PLUG 1 connector on the main panel with the red LED facing the row of terminals on the main panel. The red LED flashes slowly.
2. Position the default DIP switch 2 to the ON position.

**Note:**

The DIP2 should be software enabled (Installer programming Quick key 1 5 1)

3. From an LCD keypad, access the main Installer Programming menu.
4. Without making any changes, exit the main Installer Programming menu by pressing [0]. The LED on the Program Transfer module flashes rapidly, and the keypad displays the following:

```
Saving data in
PTM Accessory
```

5. When the LED stops flashing rapidly, the keypad beeps twice and displays the following:

```
Data is saved
```

`Please wait…`

6. Then the keypad returns to the normal initial display.
7. Remove the PTM from the PLUG 1 connector
8. Position the default DIP switch 2 to the OFF position.
9. The PTM now contains a copy of the main panel's configuration

➢ **To load the PTM's stored configuration into a main panel:**

1. Position the PTM on the PLUG 1connector on the Main with the red LED facing the row of terminals on the main panel. The red LED flashes slowly.
2. Position the default DIP switch 2 to the ON position.

**Note:**

The DIP2 should be software enabled (Installer programming: Quick key 1 5 1)

3. Momentarily remove all power from the main panel (both AC and Standby Battery).
4. Restore all power to the main panel. After a moment, the LED on the Program Transfer module flashes rapidly, indicating that the information is being copied from the PTM to the main panel. The LCD keypad displays the following:
   `Please wait…`
5. When the LED stops flashing rapidly, the keypad beeps once, and its display returns to the normal initial display.
6. Remove the PTM from the bus connector PLUG 1.
7. Position the default DIP switch 2 to the OFF position.
8. From an LCD keypad, access the main Installer Programming menu.
9. Without making any changes, exit the main Installer Programming menu by pressing [0]. The LED on the Program Transfer Module flashes rapidly, and the keypad displays the following:
   `Do you want to`
   `Save the data? Y`
10. Press .
11. The keypad beeps twice and displays the following:
    `Data is saved`
    `Please wait…`
12. Then the keypad returns to the normal initial display, and the main panel's configuration now matches the PTM.
13. Reset its `TIME` and `DATE`, which were lost when power was removed. (

## LCD Keypad

The LCD keypad is a visual interface tool that helps you operate and program the LightSYS main panel.

### Keypad Programming Key Functions

The following table describes the uses of the keypad keys during programming:

| LCD KP RW432KP | LCD KP RP128KCL | Touch screen keypad RP128KP | Function |
|---|---|---|---|
| ①–⓪ | | | 1. To enter numeric values where required.<br>2. For quick key programming. Press the number keys to access a programming option.<br>3. To edit labels and names. |
| | * | | To go back (up) / quit / don't save. |
| | # Disarm / #/6 | OK | Enter / Save (to move into the displayed menu or to save the data that you have changed). |
| | Bypass / | | Press either one of these keys to move back and forth through the programming level functions. These keys also change the position of the flashing cursor. When editing a selection, the cursor moves to the left or right respectively |
| or | Status / ? | | |
| | Stay / | | Used to toggle displayed menu options from 'N' to 'Y' and vice-versa. |
| | Arm / | | Used to increase or decrease selected screen digital values. |

If you do not know where you are in the menu structure, press repeatedly to return to the main menu.

### Entering Text Descriptions (Labels):

Use the keys on the keypad to produce characters according to the table below. Pressing a particular key toggles between the characters available from that key in the sequence listed below followed by a blank space. The LightSYS permits a total of 74 characters (letters, numbers, and symbols) for use in labeling

| Key | Data Sequence |
|---|---|
| 1 | 1 . , ' ? ! " – ( ) @ / : _ + & * # |
| 2 | 2 a b c A B C |
| 3 | 3 d e f D E F |
| 4 | 4 g h i G H I |
| 5 | 5 j k l J K L |
| 6 | 6 m n o M N O |
| 7 | 7 p q r s P Q R S |
| 8 | 8 t u v T U V |
| 9 | 9 w x y z W X Y Z |
| 0 | 0 |

### Keypad Timeout

If, after 15 minutes, no entry is made to a keypad that has been placed in the Installer Programming mode, it will produce an audible reminder, consisting of several beeps in rapid succession, along with the following display:

```
Time out
Hit any Key
```

Pressing any key stops the beeping. To re-enter the Installer Programming menu, you must key in your Installer code again and press .

## Accessing Installer Programming Menu

### First Time Power Up

➢ **To power up LightSYS for the first time:**

1. Disconnect all power from the main panel
2. Set SW1 – 2 (Default) to ON position (see page 31).
3. Set tamper switches SW1 3,4 to bypass unused tampers according to the relevant enclosure to prevent tamper alarm (see page 31).
4. Connect – power to the assembled mounted unit.
5. Press the key.
6. Select language. Scroll through the options and press .

   **Note:**

   Changing the language can be done also in regular operation mode by pressing + ⑨simultaneously

7. Enter the Installer code (default: ①①①①) and press .
8. Correct the time and date and confirm by pressing .

9. The system automatically enters the automatic accessories settings process option.
10. Move to the section "Identifying the connected devices" as described below.

### Regular operation mode

➢ **To enter Installer Programming mode**

1. From the main display press .
2. Enter the Installer code (default: ①①①①) and press .
3. Select `[1] Programming` and press .
4. You are now in Installer Programming mode. Move to the section "***Identifying the connected devices***" described below

## Identifying the Connected Devices

### Automatic Setting

**Note:**

By default, when entering Installer mode with the default DIP Switch 2 in ON position, the system will take you immediately to Auto Settings. If the keypad is already showing BUS SCANNING, skip to step 2 below.

1. Enter the programming key sequence ⑦①① (`Install, BUS Devices, Automatic`).
2. Press to begin the automatic `BUS SCANNING` (the Auto Settings process) in which it identifies all the devices on the bus.
3. Verify that the keypad displays all the devices you have connected. If a device does not appear, ensure that you have given it a unique ID within its "family".
4. Press to accept what is being displayed, to progress through configuration screens and to advance on to the next device found.
5. Repeat steps 3 and 4 until the presence of all devices has been confirmed and all parameters configured.

**Notes:**

- When adding a zone expander you should define the zones expander resistance compatibility, depending on the detectors you intend to connect to the expander. By default the resistance is set to 2.2K for EOL and DEOL termination.
- When adding a wireless expander, define the "*Bypass Box Tamper*" as YES if the wireless expander is mounted inside the LightSYS housing and not in its own.

### Bus Test

The bus test (Quick key ⑦①③①) sends multiple test commands to each device connected to the system to ensure reliable connectivity.

Press to begin the automatic `BUS TEST` in which every device is tested to report if connections are 99% or higher.

**Note:**

If a low reading is experienced, check connections with the device and repeat the bus test

## Wireless device programming workflow

Each of the 32 zones in the LightSYS can be defined as a wireless zone.

### Step 1: Allocate a wireless receiver

1. From the Installer menu, select ⑦①②⓪⑤ `(Install, Bus Device, Manual, WL Expander)`
2. Set the receiver ID (1 or 2) and using , set the type to `WL` and press .
3. If the receiver is mounted inside the LightSYS box select `Y` to bypass the box tamper. Press and move to step 2.

### Step 2: Calibrate the Receiver

For successful communication, strength of the signal should be higher than the noise threshold level, measured in a process termed *calibration*.

1. From the Installer menu, select ⑦②① `(Install, WL Device, RX Calibration)`
2. Select the wireless receiver and press .
3. Using the key, choose **[Y]** (Yes) to 'Re-Calibrate' the Wireless Receiver and press to confirm.

**Explanation:**

The calibration measurement above shows the amount of background 'noise' that the receiver can 'hear' on the same frequency as the RISCO wireless devices. This 'noise' could be neighboring devices of another system or other devices operating on the same frequency nearby. These are 'unwanted' signals that the LightSYS wireless receiver must be told 'not to listen to'.

The threshold (set above) is the absolute minimum signal strength needed to be heard from a wireless device in order for the receiver to effectively 'hear it'.

## Step 3: Allocating Wireless Device

Each wireless device must identify itself to the system receiver, in a process termed "enrollment".

Enrollment can be performed by sending an RF signal from each device, or by typing the device's unique serial code into the system. Enrollment can be done locally using the keypad or remotely using the configuration software.

➢ **To quick enrol by RF signal using a keypad**

1. From the Installer menu, select ②①②⑦⑤ `(Zones, Parameters, By Category, Advanced, WL Parameters)`
2. Using the numeric keys, enter the desired device number and press OK
3. The wireless receiver is in learn mode. Send a write message from the your wireless device as shown in the table below:

| Wireless Device | Sending Write Message |
|---|---|
| **Detector/Contacts/Flood/Shock** | Press and hold the tamper switch for 3 seconds. |
| **Smoke Detector** | Insert battery. Write message is sent automatically within 10 seconds. |
| **Gas, CO detectors** | Press and hold the test button for 3 seconds. |
| **2 Panic Button Key fob** | Press and hold both buttons for at least 7 seconds. |
| **4 Button Key fob** | Press the 🔒 button on the keyfob for at least 2 seconds |

4. Using the arrow keys, select [`SUPERVISED`] or [`NONE SUPERVISED`] for the wireless zone and press OK.
5. Repeat steps 3 to 7 until all required wireless device have been enrolled.
6. Continue entering the wireless device attributes section.

❖ Zones: Quick key 2) `Zones, > 1) Parameters`)

❖ Keyfobs: Quick key: `8) Devices > 2) Keyfob`

## Bus Detectors Programming Workflow

The following section describes the flow of adding bus detectors to the LightSYS. Bus detectors can be programmed to the main unit or to a bus zone expander.

## Programming bus detectors on the main bus

### Step 1: Adding Bus Detector to the Main Unit

**Note:**

If you have already performed Auto Settings, skip to Step 2 below: Assign Bus Detectors to a Zone ID and set basic parameters.

1. From the main installer menu press ⑦① ② ⓪⑨to access the bus Zone category.
2. Press to move the cursor to the ID field.
3. Enter the bus detector ID number as set by the detector's DIP switches (01-32)

   **Note:**

   The display "(x:yy) Type: None" represent the bus detector location in the system. In the 0:yy designation, the 0 denotes that the bus detector is on the main unit and is not assigned to a bus zone expander. The yy represents the bus detector ID number (up to 32) as set by the detector's DIP switches.
4. Using the arrow keys move to the Type field. Use the key to select the detector's type.
5. Repeat steps 2 - 4 for other bus detectors.

### Step 2: Set Bus Zone Basic Attributes

1. From the main Installer menu select `[1] Zones > [1] Parameters > [1] One by One`.
2. Select the zone number that the bus zone was assigned to and press .
3. Configure the parameters for the relevant bus detector.

### Step 3: Programming the Bus Detectors Advanced Parameters

1. From the main Installer menu select `[2] Zones > [1] Parameters > [2] By Category > [7] Advanced > [4] BZ Parameters`.
2. Select the zone number that the bus zone was assigned to and press .
3. Configure the parameters for the relevant bus detector.

## Programming bus detectors on a bus expander

Using bus expanders you can create a separate bus loop that is used only for the bus detectors connected to it. The separate bus loop increases the total system security in case a certain bus detector is sabotaged. Up to four bus expanders can be added to the LightSYS

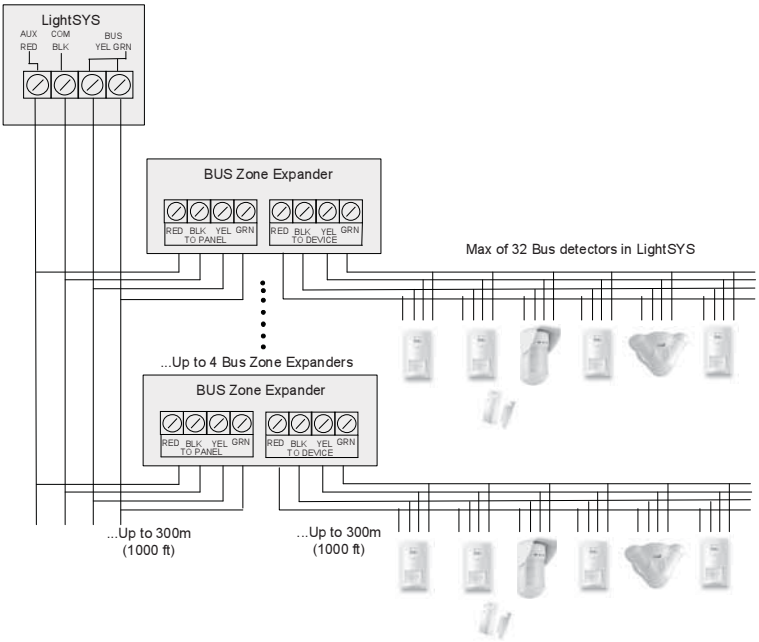


## Step 1: Adding the Bus Expander to LightSYS

**Note:**

If you already performed Auto Settings skip to Step 2 below: Assign Bus Detectors to a Zone ID and set basic parameters.

1. From the main installer menu press ⑦① ② ① ③to enter the `Bus Expander` menu.
2. Using the arrow and numeric keys select a bus zone expander `ID`.
3. Using the arrow keys move to `TYPE`. Use the key to select a `BZE32` and press .

## Step 2: Adding Bus Detector

Refer to section ***Step 1: Adding Bus Detector to the Main Unit*** to assign a bus detector to the system.

**Note**

When the bus zone is connected to a bus expander, you should define the X in the (x:yy) display as the bus expander ID (1,2,3 or 4). The yy represents the bus detector ID number (up to 32) as set by the detector's DIP switches.

### Step 3: Set Bus Zone Basic Attributes

1. From the main Installer menu select `[1] Zones > [1] Parameters > [1] One by One`.
2. Select the zone number that the bus zone was assigned to and press .
3. Configure the parameters for the relevant bus detector.

**Note:**

In the zone designation XY:ZZ the X represent the Bus Expander ID as set by its dip switches.

### Step 4: Programming the Bus Detectors Advanced Parameters

1. From the main Installer menu select `[2] Zones > [1] Parameters > [2] By Category > [7] Advanced > [4] BZ Parameters`.
2. Select the zone number that the bus zone was assigned to and press .
3. Configure the parameters for the relevant bus detector.

## Exiting Programming Mode

1. Set SW1 – 2 (Default) to OFF position.
2. Close the main box in order to prevent Front Tamper Alarm.
3. Press repeatedly to return to 'Main Menu'.
4. Press 0 > to `Exit` and `SAVE` your settings.

**Note:**

The system will not allow exit from the Installer mode if a 'Tamper' or 'System Troubel' condition exists. Correct any tamper and/or system fault conditions before attempting to exit the Installer mode.

## Restoring Manufacturer's Programming Defaults

You may find it useful to be able to remove all or some changes made to the main panel's programming and restore the default settings provided by the manufacturer.

➢ **To restore the main panel to the manufacturer's defaults:**

1. From the installer Programming menu, select:
   `1) System > 5) Setting > 2) Default Panel`
2. Using the key select whether to also restore the system labels to the manufacturer defaults and press to confirm.
3. Using the key to toggle `Y`.
4. To save your settings exit the programming mode.

## Using the Installer Programming Menus

### Installer Programming Menu Conventions

The following typographical conventions are used throughout this chapter:

1. Numeric keys are represented as ① unless they are the final keys in a programming sequence, in which case they are represented as ❶
2. Screen text is presented in `déjà vu sans mono` font:
   `System:`
   `1)Timers  ↓`

**Notes:**

If the Authorize Installer system bit is defined as YES, a Grand Master code is required to authorize the installer to enter the programming mode. In this case the grand master code should be entered after the installer code via the grand master menu
Quick key menu options are displayed only for system-recognized modules. For non-recognized modules, your menu option numerical display listing will be non-successive.

The installer menu consists of the following options:

① System, page 61
② Zones, page 85
③ Outputs, page 110
④ Codes, page 121
⑤ Communication, page 126
⑥ Audio, page 156
⑦ Install, page 160
⑧ Devices, page 176
⓪ Exit, page

The column headings appear as follows:

| Column Heading | Description |
|---|---|
| Quick Keys | A shortcut to program an option. The shortcuts are listed in numerical sequence. |
| Parameter | The name of the option programmed by the selection. |
| Default | The factory default. The default values have been carefully chosen and are suitable for most installations. |
| Range | Where applicable, the range of possible values. |

**To program the system using Quick Keys:**

1. Access the Installer Programming menu and select the main menu option that you want to access.
2. Press the Quick Keys listed in sequence (from left to right) to locate the option listed in the Parameter column and then press OK.

## 1 System

The System menu provides access to submenus and their related parameters that are used for programming configuration settings applicable to the entire system.
After you access the System menu from the main Installer Programming menu, as described in this section, you can access the following sub-menus:

① ① Timers, page 61

① ② Controls, page 65

① ③ Labels, page 80

① ④ Sounds, page 80

① ⑤ Settings, page 82

① ⑥ Auto Clock, page 83

① ⑦ Service Info, page 83

① ⑧ Firmware update, page 84

### ① ① Timers

The Timers menu contains parameters that specify the duration of an action.
Access and configure the parameters in the System Timers menu, as follows:

System: Timers

| Quick Keys | Parameter | Default | Range |
|---|---|---|---|
| ① ① ⓪ ① | **Exit/Entry Delay 1** | | |
| | Exit/Entry delays (Group 1). | | |
| ① ① ⓪ ① ❶ | **Entry Delay 1** | 30 seconds | 01-255 seconds |
| | Duration of entrance delay 1. | | |
| ① ① ⓪ ① ❷ | **Exit Delay 1** | 45 seconds | 01-255 seconds |
| | Duration of exit delay 1. | | |
| ① ① ⓪ ② | **Exit/Entry Delay 2** | | |
| | Exit/Entry delays (Group 2). | | |
| ① ① ⓪ ② ❶ | **Entry Delay 2** | 30 seconds | 01-255 seconds |
| | Duration of entrance delay 2 | | |

| Quick Keys | Parameter | Default | Range |
|---|---|---|---|
| ①①⓪②❷ | **Exit Delay 2** | 45 seconds | 01-255 seconds |
| | Duration of exit delay 2. | | |
| ①①❍❸ | **Bell Timeout** | 15 minutes | 01-90 minutes |
| | Duration of the external sounder(s) during alarm. | | |
| ①①❍❹ | **Bell Delay** | 00 minutes/seconds | 00-90 minutes/seconds |
| | The time delay before the keypad sounder and the external sounder operate after the onset of an alarm. | | |
| ①①❍❺ | **Switch Aux Break** | 10 seconds | 00-90 seconds |
| | The time that the power supplied to the system's smoke detectors through the programmable output is interrupted during a user-initiated smoke detector reset, typically performed after a fire alarm or automatically when a fire verification is defined in the system control. (Refer to Double Verification of Fire Alarms, page 68, for additional details.)<br>**Note**<br>This feature is supported through any programmable output that is defined as Switch AUX . | | |
| ①①⓪⑥ | **Wireless** | | |
| | Specifies the time intervals relating to the operation of the wireless module | | |
| ①①⓪⑥① | **Jamming Time** | None | None, 10, 20 or 30 seconds |
| | Specifies the period of time that the LightSYS's wireless module tolerates unwanted radio frequencies capable of blocking (jamming) signals produced by the system's transmitters. Once the specified time is reached, the main panel sends a report code to the alarm receiving center. (Refer to *Jamming Fault*, page 199.)<br>❶NONE ❷10 SEC ❸ 20 SEC ❹ 30 SEC<br>**NONE:** No jamming will be detected or reported.<br>**Note:**<br>Different sounds will be produced when jamming is detected, depending on the defined Audible Jamming time | | |

| Quick Keys | Parameter | Default | Range |
|---|---|---|---|
| ①①⓪⑥❷ | **RX Supervise** | 0 | 0-7 Hours |

Specifies how often the system expects to get a signal from the system's transmitters. If a signal from a zone is not received during the specified time the zone will be regarded as lost, the system will send a report code to the monitoring station, and the system status will be "Not Ready".

**Note:**

0 hours disables supervision.

It is recommended to set the supervision time to a minimum of 3 hours

| | | | |
|---|---|---|---|
| ①①❶❼ | **AC Off Delay** | 30 | 001-255 minutes |

In the case of a loss of AC power, this parameter specifies the delay period before reporting the event or operating the programmable output. If the delay time is set to zero, there will be no delay period.

| | | | |
|---|---|---|---|
| ①①❶❽ | **Guard Delay** | 30 | 01-99 minutes |

Specifies the time period that the system will be unset after an authorized user enters a Guard code.

| | | | |
|---|---|---|---|
| ①①❶❾ | **Swinger Limit** | 00 | 00-15 times |

A swinger is a repeated violation of the same zone, often resulting in a nuisance alarm and usually due to a malfunction, an environmental problem, or the incorrect installation of a detector or sensor.

This parameter specifies the number of violations of the same zone reported during a single armed period, before the zone is automatically bypassed.

**Notes**

- Enter 00 to disable the swinger shutdown.
- EN 50131 compliance with swinger limit of no more than 10 times

| | | | |
|---|---|---|---|
| ①①❶⓪ | **Redial Wait** | 30 | 0–255 seconds |

The number of seconds between attempts at redialing the same phone number.

Applies to the *MS Retries* parameter, described on page 143 and *FM Retries* described on page 156.

| | | | |
|---|---|---|---|
| ①①❶❶ | **Last Exit Sound** | 00 | 0–255 seconds |

Defines the final seconds of the Exit Time for which the beep sound will change (keypads), indicating that Exit Time period is about to expire.

| Quick Keys | Parameter | Default | Range |
|---|---|---|---|
| ①①❶❷ | **Buzzer at Stay** | 15 | 01-99 seconds |
| | Defines how much time keypads buzzer will sound before the external sounders start to operate while an alarm occurs in STAY mode. The timer is relevant only if the system control Bell>Buzzer is defined ed as Yes. | | |
| ①①❶❸ | **Status Timer** | 180 | 0-255 seconds |
| | Defines if the status of the system will be displayed while the system is armed . When the time is defined as 0, the system status will be displayed during the Arm period. When the time is not 0, the system status will be displayed only during this interval after the Arm period starts. | | |
| ①①❶❹ | **Service Timer** | 000 | 0-255 weeks |
| | Use this timer to periodically generate a "Service required" message so that the user is reminded that a service call is required. The user may continue to arm and disarm the system. When this time is other than 0, the panel will count down the time. When the time expires, a service message will be displayed on all LCD keypads whenever the keypad is on Disarm display.<br>To clear the message, the installer needs to reset the time, enter a code from the Anti Code menu or perform a "remote reset" to the panel. | | |
| ①①❶❺ | **Payment Timer** | 000 | 0-255 weeks |
| | Use this timer as a reminder for the user payment due. When this time is other than 0, the panel will count down the time. One week before the time expires a service message will be displayed as a pre-warning on all LCD keypads whenever the keypad is on Disarm display. At due time, the system is prevented from being armed.<br>To reset the time, enter a code from the Anti Code menu or Installer code, or perform a "remote reset" to the panel. | | |
| ①①❶❻ | **Pulse Open** | 25 sec | 0-255 seconds |
| | This timer is relevant only for zones defined with a pulse counter greater than one ( see ②①②⑦❷ZZ, page 96) .<br>If such a zone is regarded as **not ready** for the time defined under this timer, then the zone will be tripped and act according to its type definition. | | |

| Quick Keys | Parameter | Default | Range |
|---|---|---|---|
| ①①❶❼ | **Inactivity Timer** | 0 | 0-255 minutes |
| | This timer relates to Automatic Arm/Disarm scheduler. If there is no signal from any of the zones located in a partition that is defined under an Arm/Disarm scheduler for the time defined as **Inactive Timer** then the automatic schedule will be activated and the relevant partitions will be auto armed (according to the schedule definition).<br>Note: The Inactive Timer of the scheduling program should be defined as ON under User Menu> Clock>Scheduler>Weekly>Schedule #>Arm/Disarm>6) Inactive. | | |

## ①② Controls

The System Control menu contains parameters that control specific system operations.

Access and configure the parameters in the system control menu, as follows:

System: Controls: Basic

| Quick Keys | Parameter | Default | Range |
|---|---|---|---|
| ①②① | **Basic Programming** | | |
| | This section refers to the most common controls in the system. | | |
| ①②① ❍❶ | **Quick Arm** | Yes | Yes/No |
| | **YES**: Eliminates the need for a user code when arming (Full or partial).<br>**NO**: A valid user code is required for arming (Full or partial). | | |
| ①②① ❍❷ | **Quick UO** | Yes | Yes/No |
| | **YES**: A user can activate a utility output without the need to enter a user code.<br>**NO**: A user code is required to activate a utility output. | | |
| ①②① ❍❸ | **Allow Bypass** | Yes | Yes/No |
| | **YES**: Permits zone bypassing by authorized system users after entering a valid user code.<br>**NO**: Zone bypassing is NOT permitted. | | |
| ①②① ❍❹ | **Quick Bypass** | No | Yes/No |
| | **YES**: Eliminates the need for a valid user code when bypassing zones.<br>**NO**: Qualified users must enter a valid user code to bypass zones. | | |

| Quick Keys | Parameter | Default | Range |
|---|---|---|---|
| ①②① ❶❺ | **False Code Trouble** | Yes | Yes/No |
| | **YES**: A false code report is sent to the monitoring station after three successive attempts at arming or disarming in which an incorrect user code is entered. No alarm sounds at the premises, but a trouble indication appears on the wired keypads.<br>**NO**: A local alarm is sounded at the premises. | | |
| ①②① ❶❻ | **Bell Squawk** | Yes | Yes/No |
| | **YES**: Arming or disarming the system using a remote control, wireless keypad or a keyswitch produces a brief "chirp" and activates the strobe as follows:<br>**1.** One chirp indicates the system is armed<br>**2.** Two chirps indicate the system is disarmed.<br>**3.** Four chirps indicate the system is disarmed after an alarm.<br>**NO**: No "chirp" is produced. | | |
| ①②① ❶❼ | **3 Minute Bypass** | No | Yes/No |
| | **YES**: Bypasses all zones automatically for three minutes when power is restored to an "unpowered" system to allow for the stabilization of motion and/or smoke detectors. .<br>**NO**: No bypassing occurs. | | |
| ①②① ❶❽ | **Audible Panic** | No | Yes/No |
| | **YES**: The sirens operate when a "Police Alarm" is initiated at the keypad (if defined), the remote control or when a panic zone is activated.<br>**NO**: No siren operation occurs during a "Panic Alarm," making the alarm truly "silent" (Silent Panic).<br>**Note**<br>The system always transmits a panic report to the monitoring station. | | |
| ①②① ❶❾ | **Buzzer → Bell** | No | Yes/No |
| | **YES**: If an alarm occurs when the system is armed in the stay arm mode, a buzzer sounds for the time defined under Buzzer At Stay (see page 64) before the external sirens operate.<br>**NO**: An alarm in the Stay Arm mode causes sirens to operate simultaneously. | | |

| Quick Keys | Parameter | Default | Range |
|---|---|---|---|
| ①②① ❶❶ | **Audible Jamming** | No | Yes/No |
| | Relates to the **Jamming Time** parameter, described on page 62<br>**YES**: Once the specified time is reached, the Main Panel activates any internal sounders and sends a Report Code to the MS.<br>**NO**: Same as above, except the internal sounders do not operate. | | |
| ①②① ❶❶ | **Exit Beeps at Stay** | Yes | Yes/No |
| | Determines whether the system will sound beeps during exit time in stay arming.<br>**YES**: Exit beeps will sound.<br>**NO**: Exit beeps will not sound. | | |
| ①②① ❶❷ | **Forced Keyswitch Arming** | Yes | Yes/No |
| | **YES:** Keyswitch or Proximity Key arming is performed on any partition. Any violated (not READY) zone(s) in the partition will be bypassed automatically. The partition is then "force armed," and all intact zones are capable of producing an alarm.<br>**NO**: The partition cannot be armed until all violated (not ready) zones are secured. | | |
| ①②① ❶❸ | **Arm Pre-Warning** | Yes | Yes/No |
| | Related to auto arm/disarm operation.<br>**YES**: For any partition(s) set up for auto arming, an audible exit delay (warning) countdown will commence 4.25 minutes prior to the automatic arming. During this period, exit delay beeps will be heard.<br>You can enter a valid user code at any time during the countdown to delay the partition's automatic arming by 45 minutes.<br>When an "Auto-Arm" partition is disarmed, as described above, it can no longer be automatically armed during the current day.<br>The extended 4.25 minutes warning does not apply to automatic partial arming.<br>**NO**: Auto arming for any programmed partition(s) takes place at the designated time. The programmed exit delay period and any audible signal occur as expected. | | |

## System: Controls: Advanced

| Quick Keys | Parameter | Default | Range |
|---|---|---|---|
| ①②② | **Advanced** | **Yes** | **Yes/No** |
| | This section refers to the advanced controls in the system. | | |
| ①②② ⓪❶ | **Double Verification of Fire Alarms** | No | Yes/No |
| | **YES**: Implemented on detection of smoke or fire for verification. Power to the smoke detector(s) in the affected zone is cut off and restored after the time defined in the **Switch Aux Break** delay (page 62). If a subsequent detection occurs in the same zone within one minute of the first detection, the system emits a fire alarm.<br>**NO**: No fire alarm verification takes place. | | |
| ①②② ⓪❷ | **Alarm ZE Cut** | No | Yes/No |
| | **YES**: Produces an alarm if the communication between the main panel and any expander is lost. A report is transmitted to the MS.<br>**NO**: No alarm occurs. The system, however, produces a local trouble indication. | | |
| ①②② ⓪❸ | **Code Grand Master** | No | Yes/No |
| | **YES**: Only a user with the grand master authority level can change all user codes, along with the time and date.<br>**NO**: Users with the grand master and master authority levels can change their own user codes, all codes with a lower authority level, and the time and date. | | |
| ①②② ⓪❹ | **Area** | No | Yes/No |
| | Changes the system operation to area instead of partition, which then changes only the operation of a common zone.<br>**YES**: When selected, the following points are relevant:<br>• A common zone will be armed after any partition is armed.<br>• A common zone will be disarmed only when all partitions are disarmed.<br>**NO**: When selected, the following points are relevant:<br>• A common zone will be armed only when all partitions are armed.<br>• A common zone will be disarmed when any partition is disarmed. | | |

| Quick Keys | Parameter | Default | Range |
|---|---|---|---|
| ①②② ⓪❺ | **Global Follower** | No | Yes/No |
| | **YES**: Specifies that all zones (that are programmed to follow an Exit/Entry delay time) will follow the Exit/Entry delay time of any armed partition.<br>**NO**: Specifies that all zones (that are programmed to follow an entry delay time) will follow the entry delay time of only the partitions to which they are assigned. | | |
| ①②② ⓪❻ | **Summer/Winter** | No | Yes/No |
| | **YES:** The LightSYS automatically sets its Time of Day clock one hour ahead in the spring (on the last Sunday in March) and one hour back in the Autumn (on the last Sunday in October).<br>**NO**: No automatic time accommodation is made. | | |
| ①②② ⓪❼ | **24-Hour Bypass** | No | Yes/No |
| | **YES**: It is possible for the user to bypass a 24-hour zone.<br>**NO**: It is not possible for the user to bypass a 24-hour zone. | | |
| ①②② ⓪❽ | **Technician Tamper** | No | Yes/No |
| | **YES**: It is necessary to enter the installer code to reset a tamper alarm (). Therefore, resetting a tamper alarm requires the intervention of the alarm company. However, the system can still be armed although the tamper indication is on.<br>**NO**: Correcting the problem resets a tamper alarm, requiring no alarm company assistance. | | |
| ①②② ⓪❾ | **Technician Reset** | No | Yes/No |
| | **YES**: It is necessary to enter the installer code to reset an alarmed partition after it has been disarmed. This requires the intervention of the alarm company.<br>**Note**<br>Before the Ready LED/ ✓ can light., all zones within the partition must be secured.<br>**NO**: Once an alarmed partition is reset the Ready LED/✓ lights when all zones are secured. | | |

| Quick Keys | Parameter | Default | Range |
|---|---|---|---|
| ①②② ❶❶ | **Engineer Tamper** | No | Yes/No |
| | **YES**: After a tamper alarm, the system is not ready to arm and the tamper indication ( ) LED is not restored. This requires the intervention of the alarm company.<br>**NO**: After a tamper alarm is restored the system is ready. | | |
| ①②② ❶❶ | **Low Battery Arming** | Yes | Yes/No |
| | **YES**: Allows arming of the system when a low battery condition is detected (also in the Power Supply expansion module).<br>**NO**: Arming the system is disabled when a low battery condition is detected. | | |
| ①②② ❶❷ | **Bell 30/10** | No | Yes/No |
| | **YES**: Any internal sounders cease to sound for 10 seconds after each 30 seconds of operation.<br>**NO**: Any internal sounders operate without interruption. | | |
| ①②② ❶❸ | **Fire Temporal Pattern** | No | Yes/No |
| | **YES**: During a fire alarm, the sirens produce a pattern of three short bursts followed by a brief pause.<br>**NO**: During a fire alarm, the flow of sounds produced by the siren is a pattern of two seconds ON, then two seconds OFF. | | |

| Quick Keys | Parameter | Default | Range |
|---|---|---|---|
| ①②② ❶❹ | **IMQ Install** | No | Yes/No |

**YES**: Causes the following parameters to function as follows:

- **Auto Arm Bypass**: If there is an open zone during the auto arm process, the system will be armed, and a silent alarm will be activated (unless the open zone is closed).
- A utility output defined as "Auto Arm Alarm" is activated.
- A utility output defined as "Zone Loss Alarm" is activated
- **Guard User**: If a Guard user disarms a partition, the system will be armed automatically after the predefined time period (refer to Guard, page 63). If there is an open zone during the arming process, the system will be armed, and an alarm will be sounded (unless the open zone is closed).

**NO**: Causes the following parameters to function as follows:

- Auto Arm Bypass: If the Auto Arm programming arms the system and there is an open zone during the auto arm, the system will bypass the open zones and arm the system.
- A utility output defined as "Auto Arm Alarm" is deactivated.
- A utility output defined as "Zone Loss Alarm" is deactivated.
- Guard User: If a Guard user disarms a partition, the system will be armed automatically after the predefined time period (refer to Guard, page 63). If there is an open zone during the arming process, the partition will be bypassed.

| | | | |
|---|---|---|---|
| ①②② ❶❺ | **Disable Incoming Calls** | No | Yes/No |

This parameter is used to disable all incoming calls trying to come in through the voice channel (PSTN or GSM).

**YES**: Incoming calls from voice channel are disabled.

**NO**: Incoming calls from voice channel are enabled.

**Note**

Incoming data call via the GSM data channel is still enabled

| Quick Keys | Parameter | Default | Range |
|---|---|---|---|
| ①②② ❶❻ | **Disable Keypad When Auto Disarm Exists** | No | Yes/No |

**YES**: When a partition is armed manually or in auto arm mode, and an auto disarm time is defined, this parameter specifies that all the keypads that are masked to this partition will not function and that it will be impossible to disarm the relevant partition.

**Note**

The partition can be disarmed only by using the configuration software or the auto disarm function.

**NO**: When a partition is armed manually or in auto arm mode, and an auto disarm time is defined, the relevant keypads will function normally.

| | | | |
|---|---|---|---|
| ①②② ❶❼ | **Buzzer Delay** | Yes | Yes/No |

**YES**: The keypad buzzer will be silent during the bell delay time.

**NO**: The keypad buzzer will be audible immediately when a system alarm occurs.

| | | | |
|---|---|---|---|
| ①②② ❶❽ | **Speaker = Buzzer** | Yes | Yes/No |

**YES**: The internal sounder will follow the operation of any keypad's buzzer.

**NO**: The internal sounder will follow the external sounder operation (and not the keypad's buzzer).

| | | | |
|---|---|---|---|
| ①②② ❶❾ | **Confirmation Speaker** | No | Yes/No |

**YES**: A confirmed alarm triggers the internal sounder.

**Note**

A confirmed alarm actually eliminates the buzzer delay time, causing the internal speaker to trigger immediately.

**NO**: The internal speaker will trigger normally (at the end of bell delay time).

| | | | |
|---|---|---|---|
| ①②② ❷⓪ | **Bell Confirmation** | Yes | Yes/No |

**YES**: A confirmed alarm triggers the external bell.

**Note**

A confirmed alarm actually eliminates the bell delay time, causing the external alarm to start immediately.

**NO**: The external bell will trigger normally (at the end of bell delay time).

| Quick Keys | Parameter | Default | Range |
|---|---|---|---|
| ①②② ❷❶ | **Error Speaker Time Out** | Yes | Yes/No |
| | This option determines the duration of the alarm that is generated via the internal sounders (speakers) when the exit door is programmed as "Final Exit", and it is not closed once the exit time expires (an "EXIT ERROR").<br>**YES**: The "EXIT ERROR" alarm in the internal speaker matches the alarm bell timeout setting.<br>**NO**: The "EXIT ERROR" alarm in the internal speaker sounds continuously until user reset. | | |
| ①②② ❷❷ | **Tamper Report** | Yes | Yes/No |
| | This option determines if a tamper signal will be reported to the MS while the system is disarmed.<br>**YES**: A tamper signal will always be reported.<br>**NO**: A tamper signal will not be reported to the MS during the unset period.<br>**Note:**<br>A tamper restore report to the MS is always reported, regardless of the "TAMPER REP" definition | | |
| ①②② ❷❸ | **AC Trouble Arm** | Yes | Yes/No |
| | **YES**: The system can be armed with an AC trouble detected in the main panel, power supply module or the bus sounder.<br>**NO**: The system cannot be armed with an AC trouble. | | |
| ①②② ❷❹ | **Strobe Arm** | No | Yes/No |
| | This option allows the strobe (internal or external activated by a utility output - Utility output >Follow Partition > Strobe Trigger) to confirm the final arming of the system.<br>**YES**: A ten second strobe indication will occur after the system is armed.<br>**NO**: There will be no strobe indication when the system is armed. | | |
| ①②② ❷❺ | **Final Night** | Yes | Yes/No |
| | This option determines the behavior of a final exit zone when the system is armed at Stay.<br>**YES**: There is no need to open and close the door if the door is closed, in order to arm the system in Stay. The zone behaves like a regular "EXIT(OP)" zone type.<br>**NO**: There will be no change in the operation of a final exit zone in Stay arming. | | |

| Quick Keys | Parameter | Default | Range |
|---|---|---|---|
| ①②② ❷❻ | **Stay Strobe** | No | Yes/No |
| | **YES**: For Stay or group arming, a squawk indication will be made by the strobe activated by an output (Utility output >Follow Partition > Strobe Trigger) at the end of the exit delay time.<br>**NO**: For Stay or group setting, no indication will be made by the strobe at the end of the exit delay time. | | |
| ①②② ❷❼ | **Blank display** | No | Yes/No |
| | **YES**: Two minutes after the last keypad operation, the display will appear blank. After pressing any key, an **Enter Code** message will be displayed. The user should enter his code or pass his proximity tag. The display returns to the normal operation mode. Select this option for keypads that can be viewed from outside the protected area to disguise the system status.<br>**NO**: The keypad display operates normally | | |

System: Controls: Communication

| Quick Keys | Parameter | Default | Range |
|---|---|---|---|
| ①②③ | **Communication** | | |
| | This section refers to controls of the systems communication capabilities. | | |
| ①②③ ❶ | **Monitoring Station Enable** | Yes | Yes/No |
| | **YES**: Enables communication with the central station to report alarms, trouble, and supervisory events.<br>**NO**: No communication with the central station is possible. Choose NO for installations that are not monitored by a central station. | | |
| ①②③ ❷ | **Follow Me Enable** | Yes | Yes/No |
| | **YES**: Enables Follow-Me communication.<br>If both the MS report and the FM report are defined, the system will first call the MS phones and then the FM destinations.<br>**Note:**<br>If FM is enabled and no voice module is installed then "beeps" will be sent instead of messages.<br>**NO**: Disables Follow-Me communication. | | |

| Quick Keys | Parameter | Default | Range |
|---|---|---|---|
| ①②③ ❸ | **Configuration Software (U/D) Enable** | Yes | Yes/No |
| | **YES**: Enables communication between the alarm company and the LightSYS main panel using the configuration software. This enables modifying an installation's configuration, obtaining status information, and issuing main panel commands, all from a remote location.<br>**NO**: Disables communication, as detailed above. | | |

System: Controls: EN 50131

| Quick Keys | Parameter | Default | Range |
|---|---|---|---|
| ①②④ | **EN 50131** | | |
| | This section refers to controls that apply to EN 50131 approvals. | | |
| ①②④ ❶ | **Authorize Installer** | No | Yes/No |
| | This option limits the installer and sub-installer authorization to access the programming menu.<br>**YES**: A grand master code is required to authorize the installer to enter the programming mode for one hour.<br>**NO**: The installer does not need an authorization code. | | |
| ①②④ ❷ | **Override Trouble** | Yes | Yes/No |
| | Specifies if the system/partition can be armed when there is a trouble in the system.<br>**YES**: The system will arm even if there is a trouble in the system.<br>**NO**: When the user starts the arming process and there is a system-trouble, the user must confirm that he is aware of all troubles before continuing with the arming process. The user needs to scroll the list of troubles. At the end of the list the following question will appear: « Override Trouble? » Using the key he needs to toggle the option to Y and press . | | |

| Quick Keys | Parameter | Default | Range |
|---|---|---|---|
| ①②④ ❸ | **Restore Alarm** | No | Yes/No |
| | **YES**: The user must confirm that he is aware that alarm occurred in the system before rearming the system. The system/partition will be in "Not Ready" status until it confirms the alarm. The user needs to confirm the alarm by going to View > Alarm Memory<br>**NO**: The user does not need to confirm the alarm before rearming the system. | | |
| ①②④ ❹ | **Mandatory Event Log** | No | Yes/No |
| | **YES**: Only mandatory events (specified in the EN standard) will be displayed in the event log.<br>**NO**: All the events will be displayed in the event log. | | |
| ①②④ ❺ | **Restore Troubles** | No | Yes/No |
| | **YES**: The user must manually confirm the restoral of each trouble to a normal condition. This is done from the `User menu > View Trouble > Press OK.`<br>**NO**: The restoral report of each trouble is automatic . | | |
| ①②④ ❻ | **Exit Alarm** | Yes | Yes/No |
| | **YES**: A violated zone outside the exit route will generate an alarm during the exit time. A report to the monitoring station for arming the system is sent at the beginning of the arming procedure.<br>**NO**: A violated zone outside the exit route will cancel the arming process. A report to the monitoring station is sent at the end of a successful arming procedure. | | |
| ①②④ ❼ | **Entry Delayed Alarm** | No | Yes/No |
| | This feature is used to reduce false alarm reports to the MS.<br>**YES**: The report to the MS and the siren alarm will be delayed for 30 seconds or until the end of the predefined entry delay (the shorter time of the two) following a violation of a zone outside the entry route.<br>**NO**: A violated zone outside the entry route will generate an alarm during the entry time and a report will be sent to the MS. | | |

| Quick Keys | Parameter | Default | Range |
|---|---|---|---|
| ①②④ ❽ | **20 Minutes Signal** | No | Yes/No |
| | **YES**: Prior to arming the system, the system will check for zones that did not send a signal for more than 20 minutes. These zones will be regarded as not ready. A partition assigned with a not ready zone cannot be armed.<br>**NO**: Prior to arming, the system will not check whether a zone did not send a signal for more than 20 minutes. | | |
| ①②④ ❾ | **Attenuation** | No | Yes/No |
| | **YES**: The LightSYS receiver will be attenuated by six dB during the communication test.<br>**NO**: The LightSYS receiver works in normal operation mode. | | |

System: Controls: DD243

| Quick Keys | Parameter | Default | Range |
|---|---|---|---|
| ①②⑤ | **DD243** | Yes | Yes/No |
| | This section refers to controls that apply to DD243 approvals. | | |
| ①②⑤ ❶ | **Bypass Exit/Entry** | Yes | Yes/No |
| | **YES**: It is possible for the user to bypass an Exit/Entry zone.<br>**NO**: An Exit/Entry zone cannot be bypassed. | | |
| ①②⑤ ❷ | **Entry Disable** | No | Yes/No |
| | **YES**: The alarm confirmation process will be disabled when the entry time starts.<br>**NO**: The alarm confirmation process will start when the entry time starts. | | |
| ①②⑤ ❸ | **Route Disable** | No | Yes/No |
| | **YES**: The panel disables the entry route zones (EX/EN, EX (OP)/EN, followers and Final Exit) from participating in the alarm confirmation process when the entry time starts.<br>**Note**<br>Sequential confirmation can still be established from two confirmed zones, located off the entry route.<br>**NO**: The entry route zones will participate in the alarm confirmation process when the entry time starts. | | |

| Quick Keys | Parameter | Default | Range |
|---|---|---|---|
| ①②⑤ ❹ | **Installer Reset Confirmation** | No | Yes/No |
| | **YES**: An installer reset confirmation is required in order to reset the system after a confirmed alarm. The system cannot be armed until an installer reset confirmation is performed. The reset can be done by entering the Anti code or entering the installation mode or by performing an "Installer reset" from the keypad.<br>**NO**: Any means can be used to arm or disarm the system (keypad, remote phone operation etc.). | | |
| ①②⑤ ❺ | **Key Switch Lock** | No | Yes/No |
| | **YES**: Only a latched key switch zone can arm or disarm the system.<br>**Note**<br>When the system has more than one zone defined as latch key switch, the arm/disarm operation will occur only after all these zones are armed or disarmed.<br>**NO**: Any means can be used to arm or disarm the system (keypad, remote phone operation etc.). | | |
| ①②⑤ ❻ | **Entry Disarm** | No | Yes/No |
| | Determines if the system's disarming depends on the entry time.<br>**YES**: Only a remote control can disarm the system during the entry time.<br>**Note**<br>The system cannot be disarmed with a remote control while the system is armed.<br>**NO**: The system can be disarmed during any time using any disarming device. | | |

System: Controls: CP-01

| Quick Keys | Parameter | Default | Range |
|---|---|---|---|
| ①②⑥ | **CP-01** | | |
| | This section refers to controls that apply to comply with SIA CP 01. | | |

| Quick Keys | Parameter | Default | Range |
|---|---|---|---|
| ①②⑥ ❶ | **Exit Restart** | No | Yes/No |
| | This parameter is used to define if an exit time shall restart one additional time while an entry/exit zone is tripped twice during exit time.<br>**YES**: Exit time will restart for one time only when an entry/exit zone is tripped during exit time.<br>**NO**: Exit time will not be affected if an entry/exit zone is tripped during exit time. | | |
| ①②⑥ ❷ | **Auto Stay** | No | Yes/No |
| | This parameter is used to define the system's arming mode when using a keypad and no exit/entry zone is tripped during exit mode.<br>**YES**: If no exit/entry zone is tripped during exit time the system will be armed in STAY mode.<br>**NO**: If no exit/entry zone is tripped during exit time the system will be armed in Away mode. | | |

System: Controls: Device

| Quick Keys | Parameter | Default | Range |
|---|---|---|---|
| ①②⑦ | **Device** | **Yes** | **Yes/No** |
| | This section refers to controls that apply BUS device | | |
| ①②⑦ ❶ | **Anti Mask = Tamper** | No | Yes/No |
| | Used to determine the operation of Anti Masking detection in a bus zone.<br>**YES**: Anti mask violation will activate tamper alarm.<br>**NO**: Anti mask violation will be regarded as trouble event. | | |
| ①②⑦ ❷ | **Proximity Anti Mask =Tamper** | No | Yes/No |
| | Used to determine the operation of the proximity anti masking detection indicated by the MW channel in the WatchOUT DT detector.<br>**YES**: Proximity anti mask detection will activate the tamper alarm.<br>**NO**: Proximity anti mask detection will be regarded as a fault event.<br>Note that Proximity AM operates for approximately 2.2 seconds when the detector is approached in close proximity.<br>Ensure that Prox Anti Mask has been enabled when configuring the WatchOUT DT bus zone parameters. | | |

| Quick Keys | Parameter | Default | Range |
|---|---|---|---|
| ①②⑦ ❸ | **Audible Proximity Tamper** | No | Yes/No |
| | This parameter relates to the bus siren.<br>**YES**: A proximity anti approach violation will activate the siren.<br>**NO**: A proximity anti approach violation will not activate the siren and will be regarded as trouble by the system. | | |
| ①②⑦ ❹ | **Siren Auxiliary = Tamper** | No | Yes/No |
| | This parameter relates to the bus siren.<br>**YES**: A siren auxiliary trouble will be regarded as tamper alarm by the system.<br>**NO**: A siren auxiliary trouble will be regarded as trouble by the system. | | |

## ①③ Labels

The System Labels menu enables you to modify the labels displayed by the LCD that identify the system and partition labels. For changing labels from the keypad refer to page 52.

System: Labels

| Quick Keys | Parameter | Default | Range |
|---|---|---|---|
| ①③❶ | **System** | **Security System** | Any 16 Characters |
| | Edit's the global(system label) | | |
| ①③❷ to ①③❺ | **Partitions 1 through 4** | Partition 1 through Partition 4 | Any 16 Characters |

## ①④ Sounds

The Sounds menu contains parameters that enable you to set the sound(s) that will be produced after the following system events.

| | |
|---|---|
| ①④① | **Tamper Sound** |
| | Sets the sound(s) produced by a Tamper violation of a keypad and/or an expansion module, as follows:<br>❶ `Silent` — Produces no sound<br>❷ `Bell` (External Siren) Only<br>❸ `Buzzer` (Keypad Piezo) Only<br>❹ `Bell + Buzzer` |

System: Sounds: Tamper

| Quick Keys | Parameter | Default | Range |
|---|---|---|---|
| ①④① ❶ | **During Disarm** | Buzzer | ❶–❹ |
| | Sets the sound produced by tamper violation while the system is disarmed | | |
| ①④① ❷ | **During Arm** | Bell only | ❶–❹ |
| | Set the sound produced by tamper violation while the system is armed | | |
| ①④② | **Speaker Volume** | | |
| | Sets the volume of internal sounder (speaker) connected to the Bells+/LS- terminal according to different system modes. The volume range is between 0 (Silent) and 9 (Max volume). After changing the volume, sound will be emitted by the internal sounder to enable evaluation of the selected volume level. | | |
| ①④② ❶ | **Trouble** | 9 | 0-9 |
| | Determines the volume of the internal sounder beeps while there is trouble in the system | | |
| ①④② ❷ | **Chime** | 9 | 0-9 |
| | Determines the volume of internal sounder chime sound. The Chime sound is used as an audible indication to a zone violation while the system is Disarmed. | | |
| ①④② ❸ | **Exit/Entry** | 9 | 0-9 |
| | Determines the volume of the beeps sounded from the internal sounder during the Exit/Entry times | | |
| ①④② ❹ | **Alarm** | 9 | 0-9 |
| ①④③ | **Wireless Lost Sound** | | |
| | Sets the behavior of the sound when a wireless loss zone is detected. The sound can be activated as in a fault condition or as in a tamper condition.<br>❶ As trouble<br>❷ As tamper<br>Determines the internal sounder volume during alarm | | |

## ①⑤ Settings

This option allows setting the system in compliance with specific standardization, languages, customer of panel default:

System: Settings

| Quick Keys | Parameter | Default | Range |
|---|---|---|---|
| ①⑤❶ | **DIP 2** | Enable | Enable/Disable |
| | Used to determine whether the LightSYS default switch SW1-2 is enabled or disabled.<br>**Enabled**: When power to the main panel is switched off and then on and SW1-2 is in ON position , the Installer, Sub-Installer and Grand-Master codes will return to the original, factory default values. In this case, after entering the Installer Programming section, the system automatically enters the Automatic Accessories arming setting process.<br>Toggle the enable/disable option with . | | |
| ①⑤❷ | **Default Panel** | | |
| | Restores programming options to factory defaults.<br>The panel default option will be followed by questions regarding the defaults of the labels and erasing wireless devices. Use to select your option. (See page 59) | | |
| ①⑤❸ | **Erase Wireless** | | |
| | Erase wireless devices without changing the system current programmed parameters. Select the receiver to be erased. (Note: This entry appears only if a wireless device is registered in the system.) | | |
| ①⑤ ❹ | **Standard** | | |
| | Sets the panel programming options in compliance with the selected standard:<br>• EN standards, page 75<br>• DD243, page 77<br>• CP01, page 78 | | |

| Quick Keys | Parameter | Default | Range |
|---|---|---|---|
| ①⑤ ❺ | **Customer** | | |
| | Sets the panel programming options in compliance with the selected customer code. Each customer has its predefined parameters.<br>**Note:**<br>Selecting a customer that is different than the one in use will automatically default the panel | | |
| ①⑤ ❻ | **Language** | | |
| | Sets the system language (Email, SMS and keypad interface language)<br>❶ `Text` –Change the interface keypad language<br>❷ `Voice` –Change the voice language. (This option is only available if a voice module is assigned to the system) | | |

## ①⑥ Automatic Clock

This option is used to retrieve an automatic time update (NTP or Daytime) through the IP network or GPRS.

System: Automatic Clock

| Quick Keys | Parameter | Default | Range |
|---|---|---|---|
| ①⑥① | **Server** | Daytime | |
| | Select the internet time protocol:<br>❶ `NTP` (Network Time Protocol)<br>❷ `DAYTIME` | | |
| ①⑥❷ | **Host** | 99.150.184.201 | |
| | The IP address or server name. | | |
| ①⑥❸ | **Port** | 00013 | |
| | The NTP server port. | | |
| ①⑥④ | **Time Zone (GMT)** | | |
| | Scroll through the available selections:<br>⓪⓪)`GMT-12:00` – ❸❸)`GMT+13:00`. | | |

## ①⑦ Service Information

The Service Information menu enables you to insert information accessible to the system's users of the alarm company from whom the service is obtained.

System: Service Information

| Quick Keys | Parameter | Default | Range |
|---|---|---|---|
| ①⑦ ❶ | **Name** | Any 16 characters | |
| | Enables you to insert and/or edit the name of the MS from whom service may be obtained. | | |
| ①⑦ ❷ | **Phone** | Any 16 characters | |
| | Enables you to insert and/or edit the service phone number. | | |

## ①⑧ Firmware Update

**Note:**

The firmware update menu option series is visible only if the IP or GSM module is installed.

Access and configure the parameters in the System Control menu, as follows:

System: Firmware Update

| Quick Keys | Parameter | Default | Range |
|---|---|---|---|
| ①⑧❶ | **Server IP** | firmware.riscogroup.com | |
| | Enter the IP address of the router/gateway where the upgrade file is located. | | |
| ①⑧❷ | **Server Port** | 80 | |
| | Enter the port on the router/gateway where the upgrade file is located | | |
| ①⑧❸ | **File Name** | CMD.TXT | |
| | Enter the upgrade file name. for example: /LightSYS/0UK/cpcp.bin<br>*Please contact Customer Support services for the file name parameters* | | |
| ①⑧④ | **Download File** | | |
| | Select the communication path for the upgrade.<br>❶ `Via IP`<br>❷ `Via GPRS` | | |

## 2 Zones

The LightSYS supports up to 32 zones. Each zone can be defined to be a wired zone, a wireless zones or a bus zone. The attributes for each zone vary according to the zone's type (wired, wireless or type of bus zone).
The Zones menu provides access to submenus and their related parameters that are used for programming the characteristics of each of the system's protected zones.
After you access the Zones menu from the main Installer Programming menu, as described in this section, you can access the following submenus:

②① Zone Parameters, page 85

②② Testing, page 105

②③ Cross Zones, page 107

②④ Alarm Confirm, page 109

### ②① Parameters

The Parameters submenu allows you to program the zones parameters. You can program the basic parameters for a single zone (One by One) or a certain parameter for all zones at the same time (By Category) .

**Note:**

In addition to the basic parameters described under this section, each zone has addition advanced parameters, quick key 2>1>2>7

### ②①① Zones: Parameters: One By One

**Important:**

When using the One by One method, the listing of each zone's parameters is sequential. Once Zone 1's parameters have been programmed, they are followed by Zone 2's, then Zone 3's, and so forth.
To program one or more of the system's zones using the One by One method, changes made to any (or all) of the Zone parameters will NOT be recorded without going through the entire Zone One by One list.

The following procedure describes how to program the full complement of parameters for each zone on a one-by-one basis.

The One by One menu contains parameters that enable you to program each of the following:

- Zone Label, below
- Zone Partitions, below
- Zone Group, below
- Zone Type, page 87
- Zone Sound (Arm, Stay, Disarm), page 94
- Zone Termination, page 95
- Zone Loop Response, page 96

➢ **To program the full complement of parameters for each zone on a one-by-one basis.**

1. Access the `2) Zones` menu.
2. From with the Zones menu, press `1)Parameters`
3. From with the Parameters sub-menu, Press the `1) One by One` menu option. The following display appears:

```
ZONE ONE BY ONE
ZONE#=01 (XY:ZZ)
```

**Note**

The display next to the selected zone number defines the type of zone and its location in the system in the format *XY:ZZ*

X: Zone physical type (E=Wired zone, W=Wireless zone, B=Bus zone, I=Input zone or single BUS zone expander)

Y: The expander ID number. "0" represent the main bus, for example:

*E0:04* refer to wired zone 04 on the main board.

*B0:15* refers to bus zone 15 on the main bus.

ZZ: The serial zone number in the system (01-32)

4. Specify a two-digit zone number from which you want to start programming (for example, 01) and press to access the category of Zone Label.
5. Enter the zone label. The Labels category enables you to create and/or edit up to 15 characters to describe each of the system's zones (see page 80)
6. Press to confirm and proceed to the partitions category. The Partitions menu contains parameters that enable you to program the partition assignment for each zone. The following display appears:

```
P=1234      Z=XX
Y...
```

**Note**

The *XX* in the *Z=XX* designation is for the zone number.

In a multi-partition system, a zone can be assigned to more than one partition.

A system without partitions is regarded as having a single partition (meaning Partition 1)

Using the 1A, 2B, 3C, or 4 keys, select (Y) or deselect the relevant partitions to which this zone will belong.

7. Press to confirm and proceed to the groups category. The following display appears:

```
GROUP=ABCD Z=01
      ....
```

Select the group(s) for which the designated zone is to be in effect by using the key to toggle Y(es) and advance through the entries with the key.

**Note:**

Each partition has 4 groups. The zone group definition is common to each of the partitions assigned to the zone.

8. Press to confirm and proceed to the zone type category, displayed as follows:

```
Z=01 TYPE:
01)EX/EN1    ↕
```

(and subsequently sound (page 94), termination (page 95) and loop response (page 96).

## ②①② Zones: Parameters: By Category

Use this option to modify settings of a specific parameters to all zones.

| Quick Keys | Parameter | Default | Range |
|---|---|---|---|
| ②①② ❶ | *Label* | | |
| | The label identifies the zone in the system. Up to 16 characters, as per the procedure described on page 52. | | |
| ②①② ❷ | *Partition* | | |
| | Select the partition (1-4) assignment for each zone. | | |
| | **Group** | | |
| | Select the groups for each zone using the using the key. | | |
| ②①② ❸ | *Type* | | |
| | The Zone Type menu contains parameters that enable you to program the zone type for any zone. Setting the zone type is partly determined by the arming levels. Three arming levels exist, as follows:<br>**Disarm:** The system reacts only to those zones defined as 24 HR, Fire, Panic, and Trouble.<br>**Arm**: The system reacts to all zones.<br>**Stay**: The system does not react to zones defined as internal (home). This setting allows freedom of movement in those zones | | |
| | **Note:**<br>Zones for home arming (STAY) must be defined as Interior type<br>Available options:<br>06: Interior+Exit/Entry 1, 09: Interior +Entry follower<br>07: Interior+Exit/Entry 2, 10: Interior+Instant<br>08: Interior+Exit(OP)/Entry, , | | |

Zone Type

| Quick Keys | Parameter | Default | Range |
|---|---|---|---|

| Quick Keys | Parameter | Default | Range |
|---|---|---|---|
| ②①ZZ❶❶ | **Not Used** | | |
| | Disables a zone. All unused zones should be given this designation | | |
| ②①ZZ❶❶ | **Exit/Entry 1** | | |
| | Used for Exit/Entry doors. Violated Exit/Entry zones do not cause an intrusion alarm during the Exit/Entry Delay. If the zone is not secured by the end the delay expires it will trigger an intrusion alarm.<br>To start an arming process, this zone should be secured. When system is armed, this zone starts the **entry delay** time. | | |
| ②①ZZ❶❷ | **Exit/Entry 2** | | Arm/Stay |
| | Same as above, except that the Exit/Entry 2 time period applies. | | |
| ②①ZZ❶❸ | **Exit (OP)/Entry 1** | | |
| | Used for an exit/entry door, open during the armed period.<br>This zone behaves as described in the **Exit/Entry 1** parameter, shown above, except that, if faulted when the system is being armed, it does NOT prevent arming.<br>To avoid an intrusion alarm, it must be secured before the expiration of the **Exit Delay** period. | | |
| ②①ZZ❶❹ | **Exit (OP)/Entry 2** | | |
| | Same as above , except that the Exit (Op)/Entry 2 time period applies. | | |
| ②①ZZ❶❺ | **Entry Follower** | | |
| | Usually assigned to motion detectors and to interior doors protecting the area between the entry door and the keypad.<br>This zone(s) causes an immediate intrusion alarm when violated unless an Exit/Entry zone was violated first. In this case, Entry Follower zone(s) will remain bypassed until the end of the Entry Delay period. | | |
| ②①ZZ❶❻ | **Instant** | | |
| | Usually intended for non-exit/entry doors, window protection, shock detection, and motion detectors.<br>Causes an immediate intrusion alarm if violated after the system is armed or during the Exit Delay time period.<br>When Auto Arm and Pre-Warning are defined, the instant zone will be armed at the end of the Pre-Warning time period. | | |

| Quick Keys | Parameter | Default | Range |
|---|---|---|---|
| ②①ZZ❍❼ | **I+ Exit/Entry 1 (Interior+ Exit/Entry 1)** | | |
| | Used for Exit/Entry doors, as follows:<br>• If the system is armed in the AWAY (ARM) mode, the zone(s) provide a delay (specified by Exit/Entry 1) allowing entry into and exit from an armed premises.<br>• If the system is armed in the STAY mode, the zone is bypassed. | | |
| | **Important:**<br>For greater security when arming in the STAY mode, it is possible to eliminate the Entry Delay period associated with any zone(s), classified as *Exit/Entry Delay 1* by pressing the key twice, one after another. In effect, this makes it an INSTANT zone during the STAY mode of operation | | |
| ②①ZZ❍❽ | **I + Exit/Entry 2**<br>**(Interior + Exit/Entry 2)** | | |
| | Same as the **I+Exit/Entry 1** parameter, described above, but the Exit/Entry 2 time period is applicable. | | |
| ②①ZZ❍❾ | **I + Exit(OP)/Entry 1**<br>**Interior + Exit(OP)/Entry 1)** | | |
| | Used for an exit/entry door that, for convenience, may be kept open when the system is being armed, as follows:<br>• In AWAY (FULL ARM) mode behaves as an Exit (Op)/Entry 1 zone (see ②①ZZ❍❸ above).<br>• In STAY (ARMED) mode, the zone will be bypassed. | | |
| ②①ZZ ❶❍ | **I + Exit(OP)/Entry 2**<br>**Interior + Exit(OP)/Entry 2)** | | |
| | Used for an exit/entry door that, for convenience, may be kept open when the system is being armed, as follows:<br>• In AWAY (FULL ARM) mode behaves as an Exit (Op)/Entry 2 zone (see ②①ZZ❍❹ above).<br>• In STAY (ARMED) mode, the zone will be bypassed. | | |
| ②①ZZ ❶❶ | **I+ Entry Follow**<br>**(Interior + Entry Follower)** | | |
| | Generally used for motion detectors and/or interior doors (for example, | | |

| Quick Keys | Parameter | Default | Range |
|---|---|---|---|
| | foyer), which would have to be violated after entry in order to disarm the system, as follows:<br>• In AWAY (FULL ARM) mode behaves as an Entry Follower zone. (see ②①ZZ❍❺ above)<br>• In Stay (ARM) mode, the zone will be bypassed. | | |
| ②①ZZ ❶❷ | **I + Instant (Interior + Instant)** | | |
| | Usually intended for non-exit/entry doors, window protection, shock detection and motion detectors.<br>• In AWAY (FULL ARM) mode behaves as an intruder (instant) zone.<br>• In STAY (ARM) mode, the zone is bypassed. | | |
| ②①ZZ ❶❸ | **UO Trigger** | | |
| | For a device or zone, which if violated at any time triggers a previously programmed utility output, and is capable of activating an external indicator, relay, appliance, and so on. | | |
| ②①ZZ ❶❹ | **Day** | | Arm |
| | Usually assigned to an infrequently used door, such as an emergency door or a movable skylight. Used to alert the system user if a violation occurs during the unset period (fault by day; Intruder at night), as follows:<br>• With the system armed (either AWAY or STAY), the zone acts as an intruder zone. A violation of this zone after the system is aremd or during the exit delay time period causes an immediate intrusion alarm.<br>• With the system disarmed , a violation of this zone attempts to alert the user by causing the POWER/⏻ LEDs on all keypads to flash rapidly. This directs the user to view the system's trouble indications.<br>• Optionally, such a violation can be reported to the Central Station as a zone trouble. (Refer to Report Codes: Miscellaneous, page.203) | | |
| ②①ZZ ❶❺ | **24 Hours** | | |
| | Usually assigned to protect non-movable glass, fixed skylights, and cabinets (possibly) for shock detection systems.<br>A violation of such a zone causes an instant intrusion alarm, regardless of the system's state | | |

| Quick Keys | Parameter | Default | Range |
|---|---|---|---|
| ②①ZZ ❶❻ | **Fire** | | |
| | For smoke or other types of fire detectors. This option can also be used for manually triggered panic buttons or pull stations (if permitted), as follows:<br>• If violated, it causes an immediate fire alarm, and the Fire/🔥 LED is lit (steady).<br>• A fault in the wiring (wire open) to any fire zone causes a Fire Trouble signal (a rapid flashing of the keypads' FIRE /🔥 LED). A short in the wires will cause an immediate alarm. | | |
| ②①ZZ ❶❼ | **Panic** | | |
| | Used for external panic buttons and wireless panic transmitters.<br>If violated, an immediate panic alarm is sounded (if the zone sound is not defined as silent or audible panic system control is enabled), regardless of the system's state and panic report is sent to the monitoring station. An alarm display will not appear on the keypads.<br>If violated, an immediate panic alarm is sounded, regardless of the system's state. | | |
| ②①ZZ ❶❽ | **Special** | | |
| | For external auxiliary emergency alert buttons and wireless auxiliary emergency transmitters.<br>If violated, an immediate auxiliary emergency alarm is sounded, regardless of the system's state and a report is sent to the monitoring station. | | |
| ②①ZZ ❶❾ | **Pulsed Key Switch** | | |
| | Used to arm/Disarm the system.<br>Connects an external momentary action keyswitch to any zone terminals given this designation. | | |
| ②①ZZ ❷⓪ | **Final Exit** | | |
| | Zones of this type must be the last detector to be activated on exit or the first detector to be activated on entry. When arming the system, the related partition arms 10 seconds after this zone is closed, or opened and then closed. After it is triggered once, the zone acts as an exit (open)/entry 1 zone. | | |

| Quick Keys | Parameter | Default | Range |
|---|---|---|---|
| ②①ZZ ❷❶ | **Latch Keyswitch** | | |

Connect an external SPST latched (non-momentary) keyswitch to any zone terminals given this designation and operate the keyswitch, as follows:

- After arming one or more partitions using the keyswitch and then disarming using the keypad, the related partitions will be disarmed. In order to arm the partition using the keyswitch again, turn the key to the disarm position and then to the arm position.
- If a keyswitch latch is assigned to more than one partition and one of the partitions is armed by using the keypad (the keyswitch stays in the disarm position), then:
  - When changing the position of the keyswitch to the arm position, all the disarmed partitions, which belong to this keyswitch, will be armed.
  - When turning the keyswitch to the disarm position, all the partitions will be disarmed.

| | | | |
|---|---|---|---|
| ②①ZZ ❷❷ | **Entry Follower + Stay** | All | |

Assigned to motion detectors and to interior doors protecting the area between the entry door and the keypad, as follows:

- In STAY (ARM) mode, a zone(s) given this designation behaves like an Exit/Entry zone and is subject to the Entry and Exit Delay time periods specified under Exit/Entry Delay 1. (Refer to Exit/Entry Delay 1, page 85.)
- In AWAY (ARM) mode, a zone(s) given this designation behaves like an Entry Follower Zone and causes an immediate intrusion alarm when violated unless an Exit/Entry zone was violated first.
- If so, an Entry Follower + Stay zone(s) remains bypassed until the end of the Entry Delay period.

| | | | |
|---|---|---|---|
| ②①ZZ ❷❸ | **Pulsed Keyswitch Delay** | | |

Used to apply the **Exit/Entry Delay 1** parameter to the momentary keyswitch operation. (see ②①ZZ❶❾ above)

| | | | |
|---|---|---|---|
| ②①ZZ ❷❹ | **Latch Keyswitch Delay** | | |

Used to apply the Exit/Entry Delay 1 parameter to the latched keyswitch operation. (see ②①ZZ❷❶ above.)

| Quick Keys | Parameter | Default | Range |
|---|---|---|---|
| ②①ZZ ❷❺ | **Tamper** | | |
| | For tamper detection. This zone operates the same as 24 hours zone, but it has a special reporting code. | | |
| | **Note:** | | |
| | For this zone type the zone sound is determined according to the Tamper Sound defined under `1) System →4) Sound → 1) Tamper` | | |
| ②①ZZ ❷❻ | **Technical** | | |
| | This zone operates the same as 24 hours zone, its report code should be manually set according to the relevant detector connected to the zone. | | |
| ②①ZZ ❷❼ | **Water** | | |
| | For flood or other types of water detectors. This zone operates the same as 24 hours zone, but it has a special flood report code. | | |
| ②①ZZ ❷❽ | **Gas** | | |
| | For Gas (natural gas) leak detector. This zone operates the same as 24 hours zone, but it has a special gas report code. | | |
| ②①ZZ ❷❾ | **CO** | | |
| | For CO (Carbon Monoxide) gas detectors. This zone operates the same as 24 hours zone, but it has a special CO report code. | | |
| ②①ZZ ❸⓪ | **Exit Term** | | |
| | This type of zone is used to avoid a false alarm by acting like an Exit (OP)/Entry zone.<br>When triggered (after arming the system and closing the door or opening the door, arming the system, and closing the door), the system's Exit Delay time period will be shortened to 3 seconds.<br>When you re-open the door, the entry time restarts. | | |
| ②①ZZ ❸❶ | **High Temperature** | | |
| | For detector temperature (hot or cold). This zone operates the same as 24 hours zone, but it has a special report code. | | |
| ②①ZZ ❸❷ | **Low Temperature** | | |
| | For detector temperature (hot or cold). This zone operates the same as 24 hours zone, but it has a special report code. | | |

| Quick Keys | Parameter | Default | Range |
|---|---|---|---|
| ②①ZZ ❸❸ | **Key Box** | | |
| | This zone is mainly used in Scandinavia. Triggering this zone will be recorded in the event log. It can also be reported to the monitoring station. No alarm is triggered.<br>When using this zone you should connect the alarm wiring of this zone (usually the auxiliary contact of a door) to an external key box and the tamper wiring to the housing switch. | | |
| ②①ZZ ❸❹ | **KeySwitch Arm** | | |
| | This zone is used by financial institutions such as cash distribution centers and banks to control the arming of the vault door or treasury department entrance.<br>Use this zone for instant arming of the partition in which the zone is allocated. This zone cannot perform disarming operation. | | |
| ②①ZZ ❸❺ | **KeySwitch Delayed Arm** | | |
| | Same as the **KeySwitch Arm** (②①ZZ❸❹) type but the arming will be delayed following exit delayed time. | | |
| ②①② ❹ | *Sound* | | |
| | This menu enables you to program the sound produced when a systems zone triggers and alarm. Report to the central station are not affected by the option of this menu.<br>The following sound can be selected:<br>❖ **Silent**: Produces no sound<br>❖ **Bell Only**: Activates the bell sounders for the duration of the Bell Timeout period, or until a User Code is entered<br>❖ **Buzzer Only**: Activates each keypad's internal piezo buzzer.<br>❖ **Bell + Buzzer**: Activates the bell sounders and the keypads' buzzers simultaneously<br>**Door Chime**: The Door Chime parameter is used as an audible sounder to indicate the violation of a zone(s), as follows:<br>o If the system is DISARMED, the system's keypad buzzers make three momentary sounds whenever the zone is violated.<br>o If the system is ARMED, only the bell sounders produce the alarm.<br>❖ A different sound can be defined according to the system status as follows | | |

| Quick Keys | Parameter | Default | Range |
|---|---|---|---|
| ②①②④ ❶ | **At Arm** | | |
| | Set the sound produced when a system's zone triggers an alarm while the system is armed in Away. | | |
| ②①②④ ❷ | **At Stay** | | |
| | Set the sound produced when a system's zone triggers an alarm while the system is armed in STAY. | | |
| ②①②④ ❸ | **At Disarm** | | |
| | Set the sound produced when a system's zone triggers an alarm while the system is Disarmed. | | |
| ②①② ❺ | *Termination* | | |
| | The Termination menu enables you to program the connection type used for each of the system's zones. The actual (physical) termination for each zone must comply with that selected in the zone termination menu | | |
| ❶ | **N/C** | | |
| | Uses normally-closed contacts and no terminating End-of-Line Resistor | | |
| ❷ | **EOL** | | |
| | Uses normally-closed (NC) and/or normally-open (NO) contacts in a zone terminated by End-of-Line Resistor. | | |
| ❸ | **DEOL** | | |
| | Uses normally-closed (NC) contacts in a zone using End-of-Line Resistors to distinguish between alarms and tamper conditions. | | |
| ❹ | **N/O** | | |
| | Uses normally-open contacts and no terminating End-of-Line Resistor. | | |

| | | | |
|---|---|---|---|
| ②①② ❻ | *Loop Response* | | |
| | The Loop Response menu enables you to set the different times for which a zone violation must exist before the zone will trigger an alarm condition<br>1) **Normal**: 400 ms (milliseconds).<br>2) **Long**: 1 second<br>3) **Fast**: 10 ms (milliseconds).<br>4) **Extra Fast**: 1 ms (millisecond). This loop response is usually used for shutters or other devices that require very quick responses | | |
| Quick Keys | Parameter | Default | Range |
| ②①② ⑦ | *Advanced* | | |
| ②①②⑦① ZZ | **Forced Arming** | | |
| | This option enables or disables the use of forced arming for each of the system's zones, as follows:<br>1. If forced arming is enabled for a particular zone, it allows the system to be armed even though this zone is faulty.<br>2. When a zone(s) enabled for forced arming is faulted, the red LED blinks during the disarm period.<br>3. After arming, all zones enabled for forced arming are bypassed at the end of the exit delay time period (p. 61).<br>4. If a faulted zone (one enabled for force arming) is secured during the armed period, it will no longer be bypassed and will be included among the system's armed zones | | |
| ②①②⑦❷ ZZ | **Pulsed Counter** | 01 | 01-15 |
| | Specifies that the zone will count the number of open and close pulses received. If the zone exceeds the predefined number of pulses, the zone will be tripped and act according to its type definition. After a 25-second timeout the pulse counter is restarted. The pulse length is the currently defined loop response time period. (Refer to Zones: Loop Response, page 96.) | | |

| | |
|---|---|
| ②①②⑦③ ZZ | **Abort Alarm** |
| | This parameter defines whether a zone alarm report to the monitoring station will be immediate or delayed:<br>❶`ENABLE`: A report to the MS will be delayed according to the Abort Time Delay parameter `5) Communication > 2 MS > 6 MS Times > 2 Abort Alarm,` page 144).<br>❷`DISABLE:` A report to the MS will be sent immediately |

| Quick Keys | Parameter | Default | Range |
|---|---|---|---|
| ②①②⑦ ④ | **Bus Zones Configuration** | | |

The Bus Zone Parameters menu contains parameters that enable you to program the special parameters of a bus zone. The options are determined according to the bus detector type:

- **Lunar Grade 3**: A dual technology ceiling detector with a mounting height of up to 8.6m (28ft) that incorporates Anti-Cloak™ Technology (ACT).
- **WatchOUT DT**: A dual technology outdoor detector with signal processing based on two Passive Infrared (PIR) channels and two Microwave (MW) channels.
- **WatchOUT PIR:** An outdoor detector with signal processing based on two Passive Infrared (PIR) correlated channels
- **WatchIN DT Grade 3**: A dual technology Grade 3 industrial detector with signal processing based on two Passive Infrared (PIR) channels and two Microwave (MW) channels.
- **iWISE QUAD Grade 2**: A motion detector incorporating Quad PIR technology
- **iWISE DT Grade 3:** A motion detector incorporating both Anti-Mask and Anti-Cloak™ Technologies (ACT). It adheres to environmentally friendly guidelines and is available in 15m and 25m models.
- **iWISE QUAD Grade 3:** A motion detector incorporating Anti-Mask and Quad PIR technologies.

Use the instructions below to set parameters for the relevant bus zone detector.

➢ **To configure the Bus Zone detector parameters:**

1. From the Miscellaneous menu, press [3] to access the Bus Zone parameters menu options. The following display appears:
2. Select the zone that the bus zone detector was assigned to and press . The Bus Zone parameters menu appears.
3. Use the below tables to configure the parameters for each Bus Zone detector type.

## Bus Zone: OPR12 (WatchOUT PIR)

| Quick Keys | Parameter | Default | Range |
|---|---|---|---|
| ②①②⑦④ZZ① | **LEDS** | 3 LEDS | |
| | Defines the LEDS operation mode.<br>❶OFF - Disables the LEDS operation.<br>❷ RED ONLY - Only the Red LED will operate. This option is highly recommended to avoid the possibility that a burglar will "Learn" the detector behavior.<br>❸3 LEDS - All 3 LEDs will operate.. | | |
| ②①②⑦④ZZ② | **PIR Sensitivity** | Normal | |
| | Defines the PIR sensitivity of the detector.<br>❶LOW ❷MEDIUM ❸NORMAL ❹HIGH | | |
| ②①②⑦④ZZ③ | **Lens Type** | Wide Angle | |
| | Defines the actual lens of the detector.<br>❶WIDE ANGLE ❷BARRIER / LONG RANGE | | |
| ②①②⑦④ZZ④ | **Auxiliary Relay Mode** | Off | |
| | Defines the operation of the auxiliary relay of the detector.<br>❶ OFF - Auxiliary relay is disabled<br>❷24 Hours - The auxiliary relay will always follow an alarm<br>❸ NIGHT ONLY - The auxiliary relay output will follow an alarm condition only during night time. The time defined by the photocell on the PCB. | | |
| ②①②⑦④ZZ⑤ | **Auxiliary Relay Time** | 2.2 Seconds | 2.2–480 seconds |
| | Defines the time duration that the auxiliary relay is activated.<br>❶ 2.2 SECONDS ❷ 2 MINUTES ❸4 MINUTES ❹ 8 MINUTES | | |

## Bus Zone: iWISE DT Grade 2

| Quick Keys | Parameter | Default | Range |
|---|---|---|---|
| ②①②⑦④ZZ① | **LEDS** | On | |
| | Defines the LEDS operation mode.<br>❶OFF - Disables the LEDS operation.<br>❷ ON – Enables the LEDS operation. | | |
| ②①②⑦④ZZ② | **MW (Microwave) Range** | Trimmer | |
| | Defines the microwave channel range.<br>❶MINIMUM ❷25% ❸50% ❹65% ❺ 85% ❻ MAXIMUM ❼ TRIMMER<br>(MW is defined by the trimmer setting on the PCB) | | |
| ②①②⑦④ZZ③ | **ACT** | No | |
| | Defines the Anti-Cloak™ Technology (ACT) operation mode.<br>❶NO – Disables the ACT mode<br>❷ YES – Enables the ACT mode | | |
| ②①②⑦④ZZ④ | **Automatic Microwave Bypass** | No | |
| | Defines whether the MW channel will be bypassed or not while the detector identifies trouble in the MW channel.<br>❶NO - While detecting a problem in the MW channel it is not bypassed. Alarm condition cannot be established until the MW channel is fixed.<br>❷YES - Switches the detector to operate only in PIR mode in case of MW trouble | | |
| ②①②⑦④ZZ⑤ | **Green Line** | Yes | |
| | A feature that follows environmental guidelines by avoiding surplus emission This feature defines the activation of the microwave channel while the system is disarmed.<br>❶NO - Green Line feature is disabled. MW is constantly activated.<br>❷YES - Green Line feature is activated. | | |
| ②①②⑦④ZZ⑥ | **Self Test** | Remote | |
| | Used to test the detection technologies. In the event of a failed test, a Self Test Trouble is created.<br>❶REMOTE (Manual) - The remote self test is performed by the system when a user manually selects the Diagnostics option from the Maintenance menu via the LightSYS User Functions menu<br>❷LOCAL (automatic) - Once an hour, the detector automatically checks that the detector's channels are functioning properly. | | |

## Bus Zone: Lunar Grade 3/iWISE DT Grade 3

| Quick Keys | Parameter | Default | Range |
|---|---|---|---|
| ②①②⑦④ZZ① | **LEDS** | On | |
| | Defines the LEDS operation mode.<br>❶OFF - Disables the LEDS operation.<br>❷ ON – Enables the LEDS operation. | | |
| ②①②⑦④ZZ② | **MW (Microwave) Range** | Trimmer | |
| | Defines the microwave channel range.<br>❶MINIMUM ❷25% ❸50% ❹65% ❺ 85% ❻ MAXIMUM ❼ TRIMMER<br>(MW is defined by the trimmer setting on the PCB) | | |
| ②①②⑦④ZZ③ | **ACT** | No | |
| | Defines the Anti-Cloak™ Technology (ACT) operation mode..<br>❶NO – Disables the ACT mode<br>❷ YES – Enables the ACT mode | | |
| ②①②⑦④ZZ④ | **Automatic Microwave Bypass** | No | |
| | Defines whether the MW channel will be bypassed or not while the detector identifies trouble in the MW channel.<br>❶NO - While detecting a problem in the MW channel it is not bypassed. Alarm condition cannot be established until the MW channel is fixed.<br>❷YES - Switches the detector to operate only in PIR mode in case of MW trouble | | |
| ②①②⑦④ZZ⑤ | **Green Line** | Yes | |
| | A feature that follows environmental guidelines by avoiding surplus emission This feature defines the activation of the microwave channel while the system is disarmed.<br>❶NO - Green Line feature is disabled. MW is constantly activated.<br>❷YES - Green Line feature is activated. | | |
| ②①②⑦④ZZ⑥ | **Anti-Mask** | Enable | |
| | Defines the operation of Anti Masking detection.<br>❶DISABLE ❷ENABLE and behaves according to the settings defined in quick keys ②①②⑦④ZZ⑦ | | |

| Quick Keys | Parameter | Default | Range |
|---|---|---|---|
| ②①②⑦④ZZ⑦ | **Arm/Disarm** | No | |
| | Defines the operation of the anti masking detection while the detector is armed or disarmed..<br>❶NO – While armed or disarmed, anti-mask behaves according to the setting defined in quick keys ②①②⑦④ZZ⑥above.<br>❷YES – While armed, anti-mask is disabled. When detector is disarmed Anti-mask behaves according to the settings defined in quick keys ②①②⑦④ZZ⑥. | | |
| ②①②⑦④ZZ⑧ | **Self Test** | Remote | |
| | Used to test the detection technologies. In the event of a failed test, a Self Test Trouble is created<br>❶REMOTE (Manual) - The remote self test is performed by the system when a user manually selects the Diagnostics option from the Maintenance menu via the LightSYS User Functions menu<br>❷LOCAL (automatic) - Once an hour, the detector automatically checks that the detector's channels are functioning properly. | | |

**Bus Zone: iWISE QUAD Grade 2**

| Quick Keys | Parameter | Default | Range |
|---|---|---|---|
| ②①②⑦④ZZ① | **LEDS** | On | |
| | Defines the LEDS operation mode.<br>❶OFF - Disables the LEDS operation.<br>❷ON - Enables the LEDS operation | | |
| ②①②⑦④ZZ② | **PIR Sensitivity** | High | |
| | Defines the PIR sensitivity of the detector.<br>❶LOW ❷HIGH | | |
| ②①②⑦④ZZ③ | **Self Test** | Remote | |
| | Used to test the detection technologies. In the event of a failed test, a Self Test Trouble is created<br>❶REMOTE (Manual) - The remote self test is performed by the system when a user manually selects the Diagnostics option from the Maintenance menu via the LightSYS User Functions menu<br>❷LOCAL (automatic) - Once an hour, the detector automatically checks that the detector's channels are functioning properly | | |

## Bus Zone: iWISE QUAD Grade 3

| Quick Keys | Parameter | Default | Range |
|---|---|---|---|
| ②①②⑦④ZZ① | **LEDS** | On | |
| | Defines the LEDS operation mode.<br>❶OFF - Disables the LEDS operation.<br>❷ON – Enables the LEDS operation. | | |
| ②①②⑦④ZZ② | **PIR Sensitivity** | High | |
| | Defines the PIR sensitivity of the detector.<br>❶LOW ❷HIGH | | |
| ②①②⑦④ZZ③ | **Anti-Mask** | Enable | |
| | Defines the operation of Anti Masking detection.<br>❶DISABLE ❷ENABLE and behaves according to the settings defined in quick keys ②①②⑦④ZZ④ | | |
| ②①②⑦④ZZ④ | **Arm/Disarm** | No | |
| | Defines the operation of the anti masking detection while the detector is armed or disarmed.<br>❶NO – While armed or disarmed, anti-mask behaves according to the setting defined in quick keys ②①②⑦④ZZ③above.<br>❷YES – While armed, anti-mask is disabled. When detector is disarmed Anti-mask behaves according to the settings defined in quick keys ②①②⑦④ZZ③. | | |
| ②①②⑦④ZZ⑤ | **Self Test** | Remote | |
| | Used to test the detection technologies. In the event of a failed test, a Self Test Trouble is created<br>❶REMOTE (Manual) - The remote self test is performed by the system when a user manually selects the Diagnostics option from the Maintenance menu via the LightSYS User Functions menu<br>❷LOCAL (automatic) - Once an hour, the detector automatically checks that the detector's channels are functioning properly. | | |

## Bus Zone: ODT15 (WatchOUT DT)

| Quick Keys | Parameter | Default | Range |
|---|---|---|---|
| ②①②⑦④ZZ① | **LEDS** | 3 LEDS | |
| | Defines the LEDS operation mode.<br>❶OFF - Disables the LEDS operation.<br>❷ RED ONLY - Only the Red LED will operate. This option is highly recommended to avoid the possibility that a burglar will "Learn" the detector behavior.<br>❸3 LEDS - All 3 LEDs will operate. | | |
| ②①②⑦④ZZ② | **PIR Sensitivity** | Normal | |
| | Defines the PIR sensitivity of the detector.<br>❶LOW ❷MEDIUM ❸NORMAL ❹HIGH | | |
| ②①②⑦④ZZ③ | **MW (Microwave) Range** | Trimmer | |
| | Defines the microwave channel range.<br>❶MINIMUM ❷20% ❸40% ❹60% ❺ 80% ❻ MAXIMUM ❼ TRIMMER<br>(MW is defined by the trimmer setting on the PCB) | | |
| ②①②⑦④ZZ④ | **Anti Mask Sensitivity** | | |
| | Defines the sensitivity of the active IR AM: ❶LOW ❷HIGH | | |
| ②①②⑦④ZZ⑤ | **Lens Type** | Wide Angle | |
| | Defines the actual lens of the detector.<br>❶WIDE ANGLE ❷BARRIER / LONG RANGE | | |
| ②①②⑦④ZZ⑥ | **Anti-Mask** | Enable | |
| | Defines the operation of Anti Masking detection.<br>❶DISABLE ❷Enable | | |
| ②①②⑦④ZZ⑦ | **Arm/Disarm** | No | |
| | Defines the operation of the LEDs and Anti masking detections while the detector is armed.<br>❶ Active IR AM and Proximity AM (Anti masking) is enabled.<br>LEDs behave according to the LEDs parameter definition.<br>❷YES – Active IR AM and Proximity AM (Anti masking) is disabled LEDs are disabled. | | |
| ②①②⑦④ZZ⑧ | **Prox Anti-mask** | Enable | |
| | Defines the operation of proximity anti masking detection.<br>❶ DISABLE ❷Enable | | |

## Bus Zone: WatchIN DT Grade 3

| Quick Keys | Parameter | Default | Range |
|---|---|---|---|
| ②①②⑦④ZZ① | **LEDS** | 3 LEDS | |
| | Defines the LEDS operation mode.<br>❶OFF - Disables the LEDS operation.<br>❷ RED ONLY - Only the Red LED will operate. This option is highly recommended to avoid the possibility that a burglar will "Learn" the detector behavior.<br>❸3 LEDS - All 3 LEDs will operate.. | | |
| ②①②⑦④ZZ② | **Detection Sensitivity** | Normal | |
| | Defines the sensitivity of the detector (MW + PIR).<br>❶LOW ❷MEDIUM ❸NORMAL ❹ ACT (Anti-Cloak™ Technology) | | |
| ②①②⑦④ZZ③ | **MW (Microwave) Range** | Trimmer | |
| | Defines the microwave channel range.<br>❶MINIMUM ❷25% ❸50% ❹65% ❺ 85% ❻ MAXIMUM ❼ TRIMMER<br>(MW is defined by the trimmer setting on the PCB) | | |
| ②①②⑦④ZZ④ | **Alarm Logic** | PIR and Microwave | |
| | Determine the detector's logic of defining an alarm.<br>❶ PIR & MW (and Microwave) – An alarm is activated when both PIR and MW channels detect an alarm (AND Logic).<br>❷ PIR / MW (or Microwave) - An alarm is activated when either PIR or MW channels detect an alarm (OR Logic). | | |
| ②①②⑦④ZZ⑤ | **Lens Type** | Wide Angle | |
| | Defines the actual lens of the detector.<br>❶WIDE ANGLE ❷BARRIER / LONG RANGE | | |
| ②①②⑦④ZZ⑥ | **Anti-Mask** | Enable | |
| | Defines the operation of Anti Masking detection.<br>❶DISABLE ❷ENABLE | | |
| ②①②⑦④ZZ⑦ | **Arm/Disarm** | No | |
| | Defines the operation of the LEDs and Anti masking detections while the detector is armed.<br>❶ Active IR AM and Proximity AM (Anti masking) is enabled.<br>LEDs behave according to the LEDs parameter definition.<br>❷YES – Active IR AM and Proximity AM (Anti masking) is disabled LEDs are disabled. | | |

| Quick Keys | Parameter | Default | Range |
|---|---|---|---|
| ②①②⑦④ZZ⑧ | **Green Line** | Yes | |
| | This feature defines the activation of the microwave channel while the system is disarmed.<br>❶NO - Green Line feature is disabled. MW is constantly activated.<br>❷YES - Green Line feature is enabled. This option conforms to environmentally friendly standards by avoiding surplus emission. | | |
| ②①②⑦④ZZ⑨ | **Sway** | No | |
| | This option allows the recognition and immunity of swaying objects in a known pattern.<br>❶NO - Sway is disabled.<br>❷YES - Sway is enabled. | | |
| ②①②⑦ ❺ ZZ | **Wireless Zone Parameters - Supervision** | | |
| | Choose which zone will be supervised by the system receiver according to the time defined under the timer RX Supervision. (See ①①⓪⑥❷) | | |

| | |
|---|---|
| ②①③ | **Resistance** |
| | In the LightSYS you have the ability to define separately the end-of-line resistance of the zones on the main unit<br>Selection is done by the software with the following available options<br>Specify here the optional circuit resistance configuration.<br>❍❍Custom ❍❼ 4.7K; 4.7K<br>❍❶2.2K; 2.2K ❍❽3.3K; 4.7K<br>❍❷4.7K; 6.8K ❍❾1K; 1K<br>❍❸6.8K; 2.2K ❶❍3.3K; 3.3K<br>❍❹10K; 10K ❶❶5.6K; 5.6K<br>❍❺3.74K; 6.98K ❶❷2.2K; 1.1K<br>❍❻2.7K; 2.7K ❶❸2.2K; 4.7K |

## ②② Testing

The following menu is used to perform tests on the system. Note that each test refers to the last time the device was activated. Tests can be performed on the following elements:

| Quick Keys | Parameter | Default | Range |
|---|---|---|---|
| ②②① | **Self Test** | | |

This feature provides an automated self-test for a selected group of localized intrusion sensors (for example, glass break detectors, sound discriminators and shock sensors) which respond to an artificial source of noise and/or vibration.

Automated self-testing is especially useful when sensors are placed in high security areas where failure cannot be tolerated.

Up to 16 zones can be designated for self-testing.

A sound or vibration generator should be used that can be placed close enough to the sensors to trigger them when the noise source is activated. A Programmable Output acts as the source of switched power for the noise/vibration generator (refer to Sensors Test, page 111). This is set to conform to the testing schedule. The schedule defines the time and day for the first test, and sets the times for repeated tests over a 24-hour period.

A message is sent to the Central Station if all the related sensors are triggered during the test (if a Report Code has been defined).With successful completion of the self-test, an entry is also placed in the system's Event Log.

If one or more of the sensors fails to trip during the test period, a self-test *failure* message is generated and sent to the Central Station. A record of the failure is also entered in the Event Log.

| | | | |
|---|---|---|---|
| ②②② | **Soak Test** | | |

The Soak Test feature is designed to allow false alarming for predefined detectors to be bypassed from the system, while any alarms generated are displayed to the user for reporting to the MS. This is especially useful if Police response withdrawal is being threatened and a particular zone is causing unidentified problems.

Up to 8 zones can be placed on Soak Test. Any zone placed in the Soak Test list is bypassed from the system for 14 days and is automatically reinstated after that time if NO alarms have been generated by it.

If a zone in the Soak Test list has an alarm during the 14-day period, the keypad indicates to the user that the test has failed. After the user looks at the View Trouble option (described in the *LightSYS User's Manual*), the trouble message will be erased. This will be indicated in the event log, but no alarm will be generated. The alarmed zone's 14-day Soak Test period is then reset and restarted..

➢ **To set up a Soak-Test. [LightSYS]**

1. From the Install menu, press quick keys ②②②. The following display appears:

```
ZONES FOR TEST:
01) NONE
```

2. To put a zone on Soak Test, press . The following display appears:

```
LOCATION 01:
ZONE: 00-32
```

3. Press the keys as per the zone number (e.g. 01 for zone 1)
4. Press to confirm and display the initial menu.
5. To add a second zone for Soak Test, press and repeat the procedure above, -OR Press the key to return to the previous menu.

## ②③ Cross Zones

**Default:** No cross zoning

The Zone Crossing menu is used for additional protection from false alarms and contains parameters that enable you to link together two related zones. Both must be violated within a designated time period (between 1 and 9 minutes) before an alarm occurs.

This type of linking is used with motion detectors in *hostile* or *false-alarm prone* environments.

The LightSYS allows 10 unique sets of zone links (pairs of zones), which can be manually specified, as required. Zones crossed with themselves are valid pairs. They need to register a violation twice to trigger the alarm. This process is known as Double Knock. You may want to establish a number of zone links, but leave them deactivated at this time (see below).

| Quick Keys | Parameter | Default | Range |
|---|---|---|---|
| ②③ | **Cross Zones** | **None** | |

**To set up a Cross Zone**

1. From the Install menu, press quick keys ②③. The first zone link appears:
   ZONES CROSSING:
   01) 01 S 01
2. Press to modify the first set (01) of zone links:
   CROSSING SET 01:
   1ST = 01  2ND=01
3. Select the zone pairs manually, as required, by making changes to the number of the first zone in the set, followed by the number of the second zone. If necessary, use the or keys to position the cursor.

   **Note:**
   Zones crossed with themselves are valid pairs. They need to register a violation twice to trigger the alarm. This process is known as Double Knock.
4. Press to display the correlation type screen:
   PAIR: 01,02
   1)NONE
   Determine how the LightSYS will process violations of the paired zones.
   1) NONE– Not correlated: Temporarily disables any associated zone pairings
   2) ORDERED–Correlated: Effects an alarm so the first listed zone is tripped before the second
   3) NOT ORDERED–Correlated: Effects an alarm in which either zone in the pair may be tripped first. In this case, the specified zone order (1st, 2nd) has no bearing on the alarm activation.
5. Press to display the alarm violation differential screen:
   T.SLOT: XX,YY
   SIZE=1 MINUTES

| Quick Keys | Parameter | Default | Range |
|---|---|---|---|
| | 6. Enter the time slot, meaning the maximum amount of time allowed between the triggering events for them to be considered a valid violation (**XX,YY** indicate the crossed zones).<br>**Default**: 1 min<br>**Range**: 1 to 9 minutes<br>Repeat the entire process, as required, for any additional zone links (up to 10). | | |

## ②④ Alarm confirm

The Alarm Confirmation menu enables to define protection against false alarms and can be used for alarm verification

| Quick Keys | Parameter | Default | Range |
|---|---|---|---|
| ②④ | **Alarm confirm** | | |
| ②④❶ | **Confirm partition** | | |
| | Defines which partitions are to be defined for alarm sequential confirmation.<br>Each confirmed partition has a separate timer, which is equivalent to the confirmation time defined in "Confirmation Time Window".<br>A confirmed intruder alarm will be reported if two separate alarm conditions are detected in the same confirmed partition, during the confirmation time.<br>Cycle through the four partitions and press to toggle `Y/N` | | |
| ②④❷ | **Confirm zones** | | |
| | Define which zones are to be defined for alarm sequential confirmation.<br>When the first zone goes into alarm the system transmits the first zone alarm. When the second zone goes into alarm, during the confirmation time, the panel transmits the zone alarm and the police code. | | |

**Notes:**

- ❖ A confirmed zone will be part of the sequential confirmation only if the partition in which the alarm occurs is defined as confirmed partition as well.
- ❖ Any Code can reset a confirmed alarm.
- ❖ If the first zone is violated and not restored until the end of the confirmation time (no second zone alarm), than this zone will be excluded from the confirmation process until the next arming.

Cycle through the eight zones and to toggle `Y/N`

## 3 Outputs

The Utility Output menu provides access to submenus and their related programming parameters that enable you to choose the event that will trigger a selected Utility Output, as well as the manner in which the output will be applied.
Adding one or more Utility Output expansion modules to the system makes an extensive list of switched output possibilities available.
After you access the Utility Output menu from the main Installer Programming menu, as described in this section, you can access the following submenus:

③⓪ **Nothing**, page 110

③① **System**, page 111

③② **Partition**, page 112

③③ **Zone**, page 118

③④ **Code**, page 119

➢ **To access the Utility Output menu:**

1. From the main Installer Programming menu, press ③, or press the / keys until you find the number `3)UTILITY OUTPUT` option and then press .
2. Enter a two-digit number for the Utility Output that you want to program, using a leading zero for numbers between 1 and 9 (for example, 01, 02, and so on) and then press .
   You can now program the selected Utility Output. Use the information shown below.

**Note**

When selecting an output the display "(x:yy) represent the output location in the system. In the 0:yy designation, the 0 represents denotes that the output is on the main unit and is not assigned to an output expander. The yy represents the output ID number (up to 14).

### ③⓪ Nothing

The Nothing option enables you to disable the selected Programmable Output.

1. Access the Utility Output menu and select an output.
2. Press to disable the selected utility output.

## ③① Follow System

The System menu contains Utility Output parameters that follow the System Event.

Utility Outputs: System

| Quick Keys | Parameter |
|---|---|
| ③① ⓪❶ | **Bell Follow** |
| | Activates when a bell is triggered. If a bell delay was defined, the utility output will be activated after the delay period. |
| ③① ⓪❷ | **No Telephone Line** |
| | Activates when a telephone line fault is detected. If a PSTN Lost Delay time period is defined, the utility output will be activated after the delay time. |
| ③① ⓪❸ | **Communication Failure** |
| | Activates when communication with the MS cannot be established. Deactivates after a successful call is established with the MS. |
| ③① ⓪❹ | **Trouble Follow** |
| | Activates when a system trouble condition is detected. Deactivates after the trouble has been corrected |
| ③① ⓪❺ | **Main** Low Battery Follow |
| | Activates when the LightSYS rechargeable standby battery has insufficient reserve capacity and the voltage decreases to 11 V or following an accessory low battery indication. |
| ③① ⓪❻ | **AC Loss Follow** |
| | Activates when the source of the main panel's AC power is interrupted. This activation will follow the delay time defined in the system control times and the AC Off Delay Time parameter (refer to page 63). |
| ③① ⓪❼ | **Sensors Test** |
| | Relates to the LightSYS Zone Self-Test (Quick Keys ②②①) This option is selected if the designated utility output is part of the circuit providing switched power for the source of noise (or vibration) used in the sensors test procedure. |

| Quick Keys | Parameter |
|---|---|
| ③① ❶❽ | **Battery Test** |
| | A pulsed utility output will follow the battery test only once a day at 9:00 AM. The pulse interval is ten seconds. This parameter is usually used to perform an overload test on the system by using an external device. |
| ③① ❶❾ | **Bell Burglary** |
| | Activates the utility output after any bell burglary alarm in any partition in the system. |
| ③① ❶❶ | **Scheduler** |
| | The utility output will follow the predefined time programming that is defined in the scheduler of the weekly programs for utility output activation. For additional details, refer to the *LightSYS User's Manual*. |
| ③① ❶❶ | **Switched Aux** |
| | Activates the utility output when a fire zone is activated (for fire detection) according to the time defined in double verification of fire alarms, page 68.<br>This utility output will not have the option to choose pulse or latch in the Utility Output: Code. The pulse time is defined in switched auxiliary break, page 62. |
| ③① ❶❷ | **GSM Error** |
| | Relates to GSM/GPRS module. Activates the utility output in the following cases:<br>• There is no SIM card in the GSM/GPRS BUS Module or SIM is faulty<br>• GSM RSSI signal level is low<br>• GSM network fault |
| ③① ❶❸ | **Bell Test** |
| | Activates the output when the "Bell Test" option is selected and deactivates when the "Bell Test" option is finished. |
| ③① ❶❹ | **Installation** |
| | Activates the output following the system installation status. It activates when the system is in installer programming mode and deactivates when exiting installer's mode. |

| Quick Keys | Parameter |
|---|---|
| ③① ❶❺ | **Walk Test** |
| | Activates the output when the “Walk Test” option is selected and deactivates when the “Walk Test” option is finished. |
| ③① ❶❻ | **Burglary** |
| | Activates the output (Pulsed only) following any intruder activation in the system (Regardless the bell time out timer). The maximum number of times an output can be activated from the same zone is defined according to the Swinger Limit Timer (Quick key ①①❍❾) |
| ③① ❶❼ | **Panic** |
| | Activates the output (Pulsed only) following any panic activation in the system. The maximum number of times an output can be activated from the same zone is defined according to the Swinger Limit Timer (Quick key ①①❍❾). |
| ③① ❶❽ | **Fire** |
| | Activates the output (Pulsed only) following any fire activation in the system. The maximum number of times an output can be activated from the same zone is defined according to the Swinger Limit Timer (Quick key ①①❍❾).. |
| ③① ❶❾ | **Special** |
| | Activates the output (Pulsed only) following any special emergeny activation in the system. The maximum number of times an output can be activated from the same zone is defined according to the Swinger Limit Timer (Quick key①①❍❾). |
| ③① ❷❍ | **24 Hour** |
| | Activates the output (Pulsed only) following any 24 Hour zone activation in the system. The maximum number of times an output can be activated from the same zone is defined according to the Swinger Limit Timer (Quick key ①①❍❾). |

## ③② Follow Partition

The Partition menu contains Utility Output parameters that follow the Partition Event. The Utility Output can follow any partition(s) combination

➢ **To access the Partition sub-menus:**

1. Access the Outputs menu, as described on page 110.
2. From the Utility Output menu press . The following display appears::
   `UO=01 FOLLOWS:`
   `2) PARTITION ↕`
3. Press to access the Partition menu options. The following display appears:
   `PAR.EVENT: UO=01`
   `01)READY FOLLOW ↓`
4. Select the partition event to be followed from those listed below, using the / keys.

| Quick Keys | Parameter |
|---|---|
| ③②❶❶ | **Ready Follow** |
| | Activates the output when all the selected partition(s) are in the READY state. |
| ③② ❶❷ | **Alarm Follow** |
| | Activates the output when an alarm occurs in the selected partition(s). |
| ③② ❶❸ | **Arm Follow** |
| | Activates the utility output when the selected partition(s) is armed in either the AWAY or STAY mode. The utility output will be activated immediately, regardless of the exit delay time period. |
| ③② ❶❹ | **Burglary Follow** |
| | Activates the output when an intruder (intrusion) alarm occurs in the selected partition(s). |
| ③② ❶❺ | **Fire Follow** |
| | Activates the utility output when a fire alarm is triggered in the selected partition(s) from the keypads or a zone defined as Fire. |
| ③② ❶❻ | **Panic Follow** |
| | Activates the utility output when a panic alarm is triggered in the selected partition(s) from the keypads, remote controls or a zone defined as Panic |

| Quick Keys | Parameter |
|---|---|
| ③② ⓪❼ | **Special Emergency Follow** |
| | Activates the utility output when a special alarm is triggered in the selected partition(s) from the keypads or a zone defined as Special. |
| ③② ⓪❽ | **Buzzer Follow** |
| | Activates the output when a keypad in the selected partition(s) sounds its buzzer during auto setting, Exit/Entry delays, and alarm conditions. |
| ③② ⓪❾ | **Chime Follow** |
| | Activates the output when a keypad in the selected partition(s) sounds its chime. |
| ③② ❶⓪ | **Exit/Entry Follow** |
| | Activates the output when the selected partition(s) initiates an Exit/Entry delay period. |
| ③② ❶❶ | **Fire Trouble Follow** |
| | Activates the output when a `FIRE TROUBLE` is detected in the selected partition(s). |
| ③② ❶❷ | **Day (Zone) Trouble** |
| | Activates when a day zone trouble is detected in the selected partition(s). |
| ③② ❶❸ | **General Trouble Follow** |
| | Activates the output when a fault condition is detected in the selected partition. |
| ③② ❶❹ | **Stay Follow** |
| | Activates the utility output when the selected partition(s) is armed in STAY mode. |
| ③② ❶❺ | **Tamper Follow** |
| | A latched output activated when a tamper occurs in the selected partition(s) and follows any type of tamper. The output deactivates at tamper reset. |
| ③② ❶❻ | **Disarm Follow** |
| | Activates the utility output when the selected partition(s) is disarmed. |

| Quick Keys | Parameter |
|---|---|
| ③② ❶❼ | **Bell Follow**<br>This output enables the connection of different external sounders to different partitions. Activates the output when one of the defined partitions is in alarm mode and the bell is triggered. It will be activated for the programmed bell time or until the alarm is unset.<br>**Note:**<br>The external sounder will not generate any squawk sounds |
| ③② ❶❽ | **Bell Stay Off**<br>This parameter causes the output to function as follows:<br>• In **Away** arming mode, the output will follow the bell activation in the defined partitions.<br>• In **Stay** mode, the output will not be activated.<br>**Notes:**<br>If an alarm occurs in a zone that shares more than one partition and one of the partitions is in `Arm` mode (while the other is in `Stay` mode), the output will be activated, as described above.<br>• In **Stay** mode, a 24-hour zone will not activate this output. |
| ③② ❶❾ | **Zone Bypass**<br>Activates the output when the relevant partitions are in **Away** or **Stay** mode and any zone in the relevant partitions is bypassed. |
| ③② ❷⓪ | **Automatic Arm Alarm**<br>Activates the utility output when there is a not ready zone at the end of the pre warning time during an auto-arm process. The output restore shall be on Bell- Timeout or at user Disarm. |
| ③② ❷❶ | **Zone Loss Alarm**<br>Activates the utility output when there is a lost wireless zone in the system. The output restore shall be on Bell-Timeout or at user Disarm. |

| Quick Keys | Parameter |
|---|---|
| ③② ❷❷ | **Bell Trigger**<br>Mainly used for the connection of different external sounders to different partitions in the UK. Activates the output when one of the defined partitions is in alarm mode and the bell is triggered. It will be activated for the programmed bell time out or until alarm is disarmed. This output generates squawk sounds and has a special sound for fire alarms.<br>**Note:**<br>In fire alarm the output will not follow the bell delay time (see page 62) but will trigger immediately. It will be triggered in pulsed sequence: five seconds on and two seconds off. |
| ③② ❷❸ | **Strobe Trigger**<br>A latched output that is used to trigger a strobe. The output is activated when one of the defined partitions is in alarm mode or during squawks. The output will be activated until the alarm is disarmed. The output is also activated in test mode.<br>**Note:**<br>A tamper alarm will not activate the output if all the partitions are disarmed. |
| ③② ❷❹ | **Fail To Arm**<br>Activates when one of the defined partitions fails to arm and deactivates at user reset. |
| ③② ❷❺ | **Confirm Alarm**<br>The output activates when a confirmed alarm occurs in a partition and deactivates at the restore of the alarm confirmation. RISCO recommends that you use this output for the Red-Care STU Confirmed Alarm channel. |
| ③② ❷❻ | **Duress Follow**<br>Activates the Utility Output when a DURESS alarm is initiated at the keypad related to the selected partition(s).<br>1. Press . The following display appears:<br>`P=1234  U0=XX`<br>`Y...` |

**Note:**

The XX in the UO=XX refers to the number of the Utility Output currently being programmed.

2. Use the key to toggle between Y Yes and N No to designate the partition(s) that will activate the selected Utility Output (UO),

   -OR-

   Press the partition number [1 to 4] to select or deselect it

3. Press and proceed to Pattern of Operation, page 120 , to set the pattern and duration of operation

## ③③ Follow Zone

The Zone menu contains Utility Output parameters that follow the Zone Event. Each Utility Output can be activated by a group of up to five zones

➢ **To access the Zone sub-menus:**

1. Access the outputs menu, as described on page 110.
2. From the Utility Output menu, press [3]. The following display appears:

```
UO=01 FOLLOWS:
3) ZONE      ↕
```

3. Press to access the Zones menu. The following display appears:

```
ZONE EVENT: UO=01
1) ZONE FOLLOW ↓
```

4. Select the zone event type to be followed from the following list:

Utility Output: Zone

| Quick Keys | Parameter |
|---|---|
| ③③ ❶ | **Zone Follow** |
| | Activates the utility output when the selected zone is tripped. The tripped zone need not be armed to trigger the utility output. |
| ③③ ❷ | **Alarm Follow** |
| | Activates the utility output when the selected zone causes an alarm. |
| ③③ ❸ | **Arm Follow** |
| | Activates the utility output when the selected zone is armed by the system. |
| ③③ ❹ | **Disarm Follow** |
| | Activates the utility output when the selected zones are disarmed. |

1. Press . The following display appears:
   ZONES FOR UO=XX
   ZONE:00 1st
2. Enter the zone numbers in the group and press after each one. For each utility output, you can define a group of up to five zones.

**Note:**

If you choose a zone number that is not in the system, a broken line is displayed (--).

3. Press and proceed to Pattern of Operation, page 120, to set the pattern and duration of operation

## ③④ Follow Code

The code menu parameters enable you to program the activation of the selected utility output when the user chooses the user functions menu (Selects ACTIVITIES/UTIL OUTPUT, enters an authorized user code and presses . The installer designates the user code(s) for triggering the selected UO.

Refer to the LightSYS User's Manual for additional details about triggering utility output(s) via user codes.

**Note:**

The utility output is activated by entering a user code only if the Quick UO parameter under System Control is defined as *Disabled*. When the Quick UO is defined as *Enabled*, no user code is required.

➢ **To access the Code sub-menus:**

1. Access the outputs menu, as described on page 110.
2. From the Utility Output menu, press ④. The following display appears:
   UO=01 FOLLOWS:
   4) CODE ↑
3. Press to display the following:
   CODES FOR UO=01:
   00)GRAND N↓
4. Use the and keys to select from any of the 16 available users codes.
5. Use the key to toggle between Y YES or N NO for each user chosen to trigger the designated utility output.
6. Press and proceed to Pattern of Operation, to set the pattern and duration of operation

## Utility Output: Pattern of Operation

| Quick Keys | Parameter | Default | Range |
|---|---|---|---|
| ❶ | **Pulse N/C** | 05 seconds | 01-90 seconds |

The utility output is always activated (N/C) before it is triggered (pulled down to negative).
When triggered, it deactivates for the pulse duration specified below and then reactivates automatically.

1. Press ❶ and then press .
2. Choose the desired pulse duration, between 01-90 seconds.
3. Press and set the activation by choosing ALL or ANY using the key.
4. Press and define a label for the UO (refer to the note below).

❷ **Latch N/C**

The utility output is always Activated (N/C) before it is triggered (pulled down to negative). When triggered, it deactivates and remains deactivated (latched) until the operation is restored.

1. Press ❷and then press .
2. Using the key select ALL or ANY to set the activation and press .
3. Using the key select ALL or ANY to set the deactivation and press .
4. Define the output label and press

| ❸ | **Pulse N/O** | 05 seconds | 01-90 seconds |
|---|---|---|---|

The utility output is always deactivated (N/O) before it is triggered (pulled up). When triggered, it activates (is pulled down) for the pulse duration specified below, then deactivates automatically.

1. Press ❸and then press .
2. Choose the desired pulse duration, between 01-90 seconds
3. Press and set the activation by choosing ALL or ANY using the key
4. Select a label for the UO (refer to the note below).

| Quick Keys | Parameter | Default | Range |
|---|---|---|---|
| ❹ | **Latch N/O** | **05 seconds** | **01-90 seconds** |

The utility output is always deactivated (N/O) before it is triggered (pulled up).
When triggered, it activates (is pulled down) and remains activated (latched) until the operation is restored.

1. Press ❹ and then press .
2. Using the key select ALL or ANY to set the activation and press .
3. Using the key select ALL or ANY to set the deactivation and press .
4. Define the output label and press

**Note**

You can create and/or edit a ten-character label description for each utility output. See page 52, for additional details

### Utility Output; Activation/Deactivation

When the utility output is following more than one partition or zone, the installer can choose the logic of the utility output activation or deactivation, as follows:

- If the Pattern of Operation is defined as Latch N/O or Latch N/C, the Installer can choose the activation and deactivation logic of the UO to follow either after all the Partitions/Zones or after any of the Partitions/Zones.
- If the Pattern of Operation is defined as Pulse N/O or Pulse N/C, the Installer can choose only the activation logic of the utility output to follow either after all the Partitions/Zones or after any of the Partitions/Zones. The deactivation operation follows the defined time period.

## 4 Codes

The Codes menu provides access to submenus and their related parameters that enable you to maintain the User Codes in the system
In addition, the LightSYS contains the following special codes:

- Grand Master Code: Used by the system's owner or chief user.
- Installer Code: Used by the LightSYS installation company technician to program the main panel.
- Sub-Installer Code: Used by a technician sent by the LightSYS installation company to carry out restricted tasks defined at the time of system installation by the installation

technician. The Sub-Installer can access with his code only those programming menus predefined for his access.

This section describes how to perform the following:

- Determine the authority level of each user code
- Assign partition(s) to a specific code
- Change the Grand Master, Installer, and Sub-Installer codes
- Upgrade the security level to a six-digit code

After you access the Code Maintenance menu from the main Installer Programming menu, as described in this section, you can access the following submenus:

① User, page 121

② Grand Master, page 124

③ Installer, page 124

④ Sub-Installer, page 124

⑤ Code length, page 125

➢ **To access the Codes menu:**

1. From the main Installer Programming menu, press [4], or press the / keys until you find the number [4] Codes and then press . The first submenu 1) User appears.
2. You are now in the Codes menu and can access the required submenus, as described in the following sections

## ④① User

User rights can be defined by allocating each user a specific authority level and specific partitions. Up to 16 users can be defined in the system

1. Access the `4) Codes` menu
2. Press 1 to access the user menu
3. Select user and press
4. Set partition and authority level as follows

| Quick Keys | Parameter | Default | Range |
|---|---|---|---|
| ④① ❶ | **Partition** | | |
| | Specify the partition(s) for which the designated user can have access by using the ❶ to ❹ keys. | | |

| Quick Keys | Parameter | Default | Range |
|---|---|---|---|
| ④① ❷ | **Authority Level** | | |

The Authority menu enables you assign the Authority Level of each User Code. There are seven Authority Levels to match the needs of various users, as described in Authority Levels, below

Toggle through the set of available user definitions using the key:

- **Master**: There are no restrictions in the number of master codes (as long as they do not exceed the number of codes remaining in the system).
  - Restricted to assigning and changing user codes belonging to those with authority levels of master and below (user, arm only, and maid)
  - Restricted access to designated partitions
- **User**: There are no restrictions in the number of user codes (as long as they do not exceed the number of codes remaining in the system). The user has access to the following:
  - Arming and disarming
  - Bypassing zones
  - Accessing designated partitions
  - Viewing system status, trouble, and alarm memory
  - Resetting the switched auxiliary output
  - Activating designated utility outputs
  - Changing his/her own user code
- **Arm Only**: There are no restrictions in the number of Arm Only codes (as long as they don't exceed the number of codes remaining in the system). Arm Only codes are useful for workers who arrive when the premises are already open, but because they are last to leave, they're given the responsibility to close the premises and arm the system. The users with Arm Only codes have access for arming one or more partitions.
- **Cleaner**: The cleaner code is a temporary code, which is to be immediately deleted from the system as soon as it is used to arm. This code is typically used for maids, home attendants, and repairmen who must enter the premises before the owner(s) arrive. These codes are used as follows:
  - For one-time arming in one or more partitions.
  - If first used to disarm the system, the Maid code may be

| Quick Keys | Parameter | Default | Range |
|---|---|---|---|

used once for subsequent arming.

- **User Unbypass**: This user has access to all the user's privileges apart from bypassing zones.
- **Guard**: This user can only disarm the system. After entering the Guard code, the system will be disarmed for the predefined time period (See: Guard Delay, page 63).
- **Duress**: When coerced into disarming the system, the user can comply with the intruder's wishes while sending a silent duress alarm to the central station. To do so, a special duress code must be used, which when used, will disarm the system in the regular manner, while simultaneously transmitting the duress alarm. In any other situation the Duress authority level behaves the same as the user authority level.
- **UO Control**: Typically used to enable the operation of a device controlled by a utility output (meaning a door and so on). These codes are used only to operate a utility output.

### ④② Grand Master

Default: 1234.

The Grand Master Code is used by the system's owner and is the highest Authority Level. The owner can set/change the Grand Master Code.

**Note:**

The grand master code can also be changed in the user menu (by the grand master).
The Grand Master code is designated as Code 00.
The grand master, the installer and the sub-installer can enter and change other level codes, but they cannot see the code. The message [****] is displayed instead of the code

### ④③ Installer

Default: 1111

The Installer Code provides access to the Installer Programming menu, allowing modification of all system parameters. The Installer Code is used by the **LightSYS** installation company technician to program the system.

The Installer can change the Installer Code.

### ④④ Sub Installer

Default: 2222

The sub-installer code allows limited access to selected parameters from the installer

programming menu.
We recommend changing the factory default to a code unique to the main panel and/or to those who may serve as sub-installers in your MS, as described in the following procedure.
The Sub-Installer is prohibited to access the following parameters:

- Default Enable
- Code Length
- Installer Code
- Communication menu.

## ④⑤ Code Length

The Code Length specifies the number of digits (either 4 or 6) for the Grand Master and Master codes. All the other codes (User, Arm Only and Maid) use from one digit up to a maximum of six digits.

**Note:**

When you change the code length parameter, all user codes are deleted and must be re-programmed or downloaded.
For a 6-digit Code Length system, 4-digit default codes like 1-2-3-4 (Grand Master), 1-1-1-1 (Installer), and 2-2-2-2 (Sub-Installer) become 1-2-3-4-0-0, 1-1-1-1-0-0, and 2-2-2-2-0-0, respectively.
If you change the Code Length back to 4 digits, the system codes are restored to the default 4-digit codes.

**EN 50131 Note:**

- All code length are 4 digits: xxxx
- For each digit 0-9 can be used
- All codes from 0001 to 9999 are acceptable
- Invalid codes cannot be created since after 4 digits are input, the "Enter" is automatic.
- Codes are rejected when trying to create a code that does not exist.

## 5 Communication

The Communication menu provides access to submenus and their related parameters that enable the system to establish communication with the monitoring station, Follow Me or Configuration Software.
The Communication menu is divided into the following sub-menus:

⑤① Method, page 126

⑤② Monitoring Station (MS), page 137

⑤③ Configuration Software, page 147

⑤④ Follow Me, page 150

### ⑤① Method

This option allows you to configure the parameters of the communication methods (channels) of the LightSYS, with three available communication types:

① PSTN

② GSM

③ IP

④ Radio (Long Range radio)

### PSTN

| Quick Keys | Parameter | Default | Range |
|---|---|---|---|
| ⑤①① | **PSTN** | | |
| | The PSTN screens contains parameters for the communication of the LightSYS over the PSTN network. | | |
| ⑤①①① | **Timers** | | |
| | Timers related to communication through the PSTN channel | | |
| ⑤①①① ❶ | **PSTN Lost Delay** | 4 minutes | 0–20 minutes |
| | The time after which the system will regard the PSTN line as lost. This time also specifies the delay before reporting the event into the event log or operating a utility output that follows this event.<br>00 indicates no supervision of the phone line. | | |
| ⑤①①① ❷ | **Wait for Dial Tone** | 3 | 0–255 seconds |
| | The number of seconds the system waits to detect a dial tone. | | |

| Quick Keys | Parameter | Default | Range |
|---|---|---|---|
| ⑤①①② | **Control** | | |
| ⑤①①② ❶ | **Alarm Phone Line Cut** | No | Yes/No |
| | **YES**: Activates the external sirens if the land line, connected to the LightSYS panel is cut or the telephone service is interrupted for the time defined in the PSTN Lost time parameter.<br>**NO**: No activation occurs. | | |
| ⑤①①② ❷ | **Answering Machine Override** | Yes | Yes/No |
| | **YES**: The Answering Machine Override is enabled, as follows:<br>**1.** The configuration software at the alarm company calls the account.<br>**2.** The software hangs up after one ring by the CS operator.<br>**3.** Within one minute, the software calls again.<br>**4.** The LightSYS is programmed to pick up this second call on the first ring, thus bypassing any interaction with the answering machine.<br>**Note:**<br>This feature is used to prevent interference from an answering machine with remote configuration software operations.<br>**NO**: The answering machine override is disabled, and communication takes place in the standard manner. | | |
| ⑤①①③ | **Parameters** | | |
| ⑤①①③ ① | **Dial Method** | **DTMF** | |
| | When selecting the dialing method, your choice must be compatible with the type of phone service available at the protected premises. Use the / keys to choose between the options.<br>❶ DTMF (Touch Tone ®)<br>❷ PULSE, 20BPS<br>❸ PULSE, 10BPS | | |
| ⑤①①③ ❷ | **Rings To Answer** | 12 | 01-15 |
| | The number of rings before the system answers an incoming call | | |

| Quick Keys | Parameter | Default | Range |
|---|---|---|---|
| ⑤①①③ ❸ | **Area Code** | | |
| | The system area telephone code. This code will be deleted from a telephone number while the system tries to dial the number through the PSTN network. | | |
| ⑤①①③ ❹ | **PBX Prefix** | | |
| | A number dialed to access an outgoing line when the system is connected to a Private Branch Exchange (PBX) and not directly to a PSTN line. This number will be added automatically by the system while trying to call from a PSTN line. | | |
| ⑤①①③❺ | **Call Wait** | | |
| | Enter a string to prevent call waiting from interrupting the system during a report to the monitoring station, as defined by your local telephone provider, for example: *70.<br>This string will only appear during the first attempt to send a report to a MS number (PSTN or GSM).<br>**Note:**<br>Do Not use the Call Waiting cancel features inappropriately. Using this feature on a line with no call waiting will prevent successfully reporting to the monitoring station. | | |

## GSM

| Quick Keys | Parameter | Default | Range |
|---|---|---|---|
| ⑤①② | **GSM** | | |
| | The GSM screen contains parameters for the communication of the system over the GSM/GPRS network. | | |
| ⑤①②① | *Timers* | | |
| | Allows to program timers related to operation with the GSM module | | |
| ⑤①②①❶ | **Low RSSI GSM Duration** | 1 minute | 001–255 minutes |
| | The period length during which the reception is below the minimum threshold (defined by the GSM Network Sensitivity parameter) that triggers the Panel to send a report of GSM Lost. (⑤①②⑤ ❹) | | |

| Quick Keys | Parameter | Default | Range |
|---|---|---|---|
| ⑤①②①❷ | **GSM Network Loss** | 10 minutes | 001–255 minutes |
| | The period length after which the Panel will send a report of GSM network loss to the MS. | | |
| ⑤①②①❸ | **SIM Expire** | 0 months | 00–36 months |
| | A pre-paid SIM card has a defined life length defined by the provider. After each charging of the SIM, the user will have to manually reset the expiration time of the SIM card. Thirty days before the expiring date, a notification will be displayed on the keypad's LCD.<br>Set the SIM expiring date (in months) using the numeric keys, according to the time given by the provider. | | |
| ⑤①②①❹ | **MS Polling** | 00000 | 0-65535 times |
| | The time period that the system will establish automatic communication (polling) with the MS over GPRS, in order to check the connection.<br>3 polling times can be defined: Primary, Secondary and Backup. For each time period define the number of units between 1- 65535. Each unit represents a time frame of 10 seconds. | | |

**Note:**

When using the polling feature through GPRS the MS channel parameter must be defined as GPRS only.
The report code for MS polling is 999 (Contact ID) or ZZ (SIA)
When the GPRS Primary polling time is defined as 0, no polling message is sent to the MS

The use of these time periods depends on the reporting order to the MS defined by the Report Split MS Urgent parameter (See: `5)Communication > 2)MS > 7)Report Split`)

The following table describes how the three MSs use the primary, secondary and backup time intervals in the various MS report split options.

| MS report Urgent events | MS 1 Polling State | MS 2Polling State | MS 3 Polling State |
|---|---|---|---|
| Do not call | N/A | N/A | N/A |
| Call 1st | Primary | N/A | N/A |
| Call 2nd | N/A | Primary | N/A |
| Call 3rd | N/A | N/A | Primary |

| Quick Keys | Parameter | Default | Range |
|---|---|---|---|
| Call All | Primary | Primary | Primary |
| 1st Backup 2nd | Primary | If (MS 1 is OK) Secondary else (MS#1 Fails) Backup | N/A |
| 1st Backup 2nd3rd | Primary | If (MS#1 is OK) Secondary else (MS#1 Fails) Backup | If (MS#2 is OK) Secondary else (MS#2 Fails) Backup |
| 1st Backup 3rd Call 2nd | Primary | Primary | If (MS#1 is OK) Secondary else (MS#1 Fails) Backup |
| 2nd Backup 3rd Call 1st | Primary | Primary | If (MS#2 is OK) Secondary else (MS#2 Fails) Backup |

**MS Polling example**:
When selecting MS 1 (GPRS), MS 2 (GPRS) and split report option 1st Backup 2nd (using the default primary, secondary and backup time intervals), the report process will be as follows:
In a normal state:
Polling through the GPRS network using the GSM module will occur every 90 seconds according to the primary time interval to MS 1 and every 3600 seconds (1 hour) according to the secondary time interval to MS 2.
When communication to MS 1 fails, polling occurs every 90 seconds according to the backup interval to MS 2. When communication returns to MS 1, polling reverts back to the secondary time interval and occurs every 3600 seconds (1 hour) to MS#2.

| Quick Keys | Parameter | Default | Range |
|---|---|---|---|
| ⑤①②② | **GPRS** | | |
| | Allows programming parameters that relate for the communication over the GPRS network. | | |
| ⑤①②②❶ | **APN Code** | | |
| | To establish a connection to the GPRS network an APN (Access Point Name) code is required. The APN code differs from country to country and from one provider to another (the APN code is provided by your cellular provider).<br>The LightSYS supports an APN code field of up to 30 alphanumeric characters and symbols (!, &, ? etc). | | |
| ⑤①②②❷ | **APN User Name** | | |
| | Enter user name for the GPRS network (if required). The user name is provided by your provider.<br>The LightSYS supports a user name field of up to 20 alphanumeric characters and symbols (!, &, ? etc). | | |
| ⑤①②②❸ | **APN Password** | | |
| | The password to the GPRS network as provided by your provider (if required).<br>The LightSYS supports a user name field of up to 20 alphanumeric characters and symbols. | | |
| ⑤①②③ | **Email** | | |
| | The following programming parameters are used to enable sending Follow Me event messages by e-mail through GPRS.<br>**Notes:**<br>To enable e-mail messaging, the GPRS parameters have to be defined . | | |
| ⑤①②③ ❶ | **Mail Host** | 000.000.000.000 | |
| | The IP address or the host name of the SMTP mail server. | | |
| ⑤①②③ ❷ | **SMTP Port** | 00000 | 00000–65535 |
| | The port address of the SMTP mail server. | | |
| ⑤①②③ ❸ | **Email Address** | | |
| | The Email address that identifies the system to the mail recipient. | | |

| Quick Keys | Parameter | Default | Range |
|---|---|---|---|
| ⑤①②③ ❹ | **SMTP User Name** | | |
| | A name identifying the user to the SMTP mail server<br>The user name field can include up to 10 alphanumeric characters and symbols (!, &, ? etc) | | |
| ⑤①②③ ❺ | **SMTP Password** | | |
| | The password authenticating the user to the SMTP mail server<br>The password can include up to ten alphanumeric characters and symbols (!, &, ? etc). | | |
| ⑤①②④ | *Controls* | | |
| | Allows controlling timers related to operation with the GSM module. | | |
| ⑤①②④ ❶ | **Caller ID** | No | Yes/No |
| | The Caller ID function enables to restrict SMS remote control operations to the predefined Follow Me phone numbers. If the incoming number is recognized as one of the Follow Me numbers, the operation will be executed. | | |
| ⑤①②⑤ | *Parameters* | | |
| | Allows to program timers related to the operation with the GSM module. | | |
| ⑤①②⑤ ❶ | **PIN Code** | | |
| | The PIN (Personal Identity Number) code is a 4 to 8 digit number giving you access to the GSM network provider.<br>**Note:**<br>You can cancel the PIN code request function by inserting the SIM card into a regular mobile phone and according to the phone settings, disable this function | | |
| ⑤①②⑤ ❷ | **SIM Number** | | |
| | The SIM phone number. The system uses this parameter to receive the time from the GSM network in order to update the system time. | | |
| ⑤①②⑤ ❸ | **SMS Center Phone** | | |
| | A telephone number of the message delivery center. This number can be obtained from the network operator. | | |

| Quick Keys | Parameter | Default | Range |
|---|---|---|---|
| ⑤①②⑤ ❹ | **GSM Network Sensitivity (RSSI)** | | Disabled/Low/High |
| | Set the minimum acceptable network signal level (RSSI level).<br>Options: Disabled (No troubles for low signal reception) / Low signal / High signal | | |
| ⑤①②⑥ | *Prepay SIM* | | |
| | Allows programming parameters that will be used when a prepaid SIM card is used in the system. | | |
| ⑤①②⑥ ❶ | **Get Credit by** | | |
| | Depending on the local network provider, the user can receive the credit level of the prepaid SIM card by sending a predefined SMS command to a defined number or by calling a predefined number through the voice channel. The activation of the credit request can be done by the Grand Master.<br>• **SMS Credit Message**: Enter the message command as defined by the provider and the provider's phone number to which the credit level SMS message request will be sent.<br>• **Voice Credit**: Enter the provider's phone number to which a call will be established<br>• **Service Command**: Enter the service command message as defined by the provider | | |
| ⑤①②⑥ ❷ | **Phone To Send** | | |
| | The provider's phone number to which the credit level SMS message request will be sent to or a call will be established, depending on the selection in the Get Credit by parameter. | | |
| ⑤①②⑥ ❸ | **Phone To Receive** | | |
| | The provider's telephone number from which an automatic SMS credit status message will be sent from. | | |
| ⑤①②⑥ ❹ | **SMS Message** | | |
| | When performing manual Credit Level check this message will be sent to the provider in order to receive the SIM card credit. The message is predefined (for example "BILL") by your service provider.<br>* When using a service command this field is ignored. | | |

## IP

| Quick Keys | Parameter | Default | Range |
|---|---|---|---|
| ⑤①③ | **IP** | | |
| | The IP menu contains parameters for the communication of the system over the IP network. | | |
| ⑤①③① | *IP Config* | | |
| | The IP menu contains parameters for the communication of the system over the IP network. | | |
| ⑤①③①① | **Obtain Automatic IP** | | |
| | Defines whether the IP address, which the LightSYS refers to, is dynamic or static. | | |
| ⑤①③①①❶ | **Dynamic IP** | | |
| | The system refers to an IP address provided by the DHCP. | | |
| ⑤①③①①❷ | **Static IP** | | |
| | The system refers to a static IP Address. | | |
| ⑤①③①❷ | **Panel Port** | | |
| | The LightSYS Port address. | | |
| ⑤①③①❸ | **Panel IP (Only for Static IP)** | | |
| | The LightSYS static IP address | | |
| ⑤①③①❹ | **Subnet Mask (Only for Static IP)** | | |
| | The subnet mask is used to determine where the network number in an IP address ends. | | |
| ⑤①③①❺ | **Gateway (Only for Static IP)** | | |
| | The IP address of the local Gateway, which enables communication settings to other LAN segments. This address is the IP address of the router connected to the same LAN segment as the LightSYS. | | |
| ⑤①③①❻ | **DNS Primary (Only for Static IP)** | | |
| | The IP address of the primary DNS server on the network. | | |
| ⑤①③①❼ | **DNS Secondary (Only for Static IP)** | | |
| | The IP address of the secondary DNS server on the network. | | |

| Quick Keys | Parameter | Default | Range |
|---|---|---|---|
| ⑤①③② | *Email* | | |
| | Allows programming parameters that enable the LightSYS to send Email messages following Follow Me events | | |
| ⑤①③② ❶ | **Mail Host** | 000.000.000.000 | |
| | The IP address or the host name of the SMTP mail server. | | |
| ⑤①③② ❷ | **SMTP Port** | 00000 | 00000–65535 |
| | The port address of the SMTP mail server | | |
| ⑤①③② ❸ | **Email Address** | | |
| | The Email address that identifies the system to the mail recipient. | | |
| ⑤①③② ❹ | **SMTP User Name** | | |
| | A name identifying the user to the SMTP mail server. The user name field can include up to 10 alphanumeric characters and symbols (!, &, ? etc). | | |
| ⑤①③② ❺ | **SMTP Password** | | |
| | The password authenticating the user to the SMTP mail server. The PW can include up to 10 alphanumeric characters and symbols (!, &, ? etc). | | |
| ⑤①③❸ | *Host Name* | Up to 32 Characters | |
| | IP address or a text name used to identify the LightSYS over the network. Default: Security System | | |
| ⑤①③④ | *MS Keep alive (Polling)* | | |
| | The time period that the system will establish automatic communication (polling) with the MS over the IP network, in order to check the connection. Three polling times can be defined: primary, secondary and backup. For each time period, define the number of units between 1–65535. Each unit represents a time frame of 10 seconds. | | |
| | **Note:** | | |
| | When using the polling feature through IP, the MS channel parameter must be defined as IP only. | | |
| | The use of these time periods depends on the reporting order to the MS defined by the report split MS urgent parameter (See page 146). The following table describes how the three MSs use the primary, secondary and backup time intervals in the various MS report split options.) | | |

| Quick Keys | Parameter | Default | Range |
|---|---|---|---|

| MS report Urgent events | MS 1 Polling State | MS 2Polling State | MS 3 Polling State |
|---|---|---|---|
| Do not call | N/A | N/A | N/A |
| Call 1st | Primary | N/A | N/A |
| Call 2nd | N/A | Primary | N/A |
| Call 3rd | N/A | N/A | Primary |
| Call All | Primary | Primary | Primary |
| 1st Backup 2nd | Primary | If (MS 1 is OK) Secondary else (MS#1 Fails) Backup | N/A |
| 1st Backup 2nd3rd | Primary | If (MS#1 is OK) Secondary else (MS#1 Fails) Backup | If (MS#2 is OK) Secondary else (MS#2 Fails) Backup |
| 1st Backup 3rd Call 2nd | Primary | Primary | If (MS#1 is OK) Secondary else (MS#1 Fails) Backup |
| 2nd Backup 3rd Call 1st | Primary | Primary | If (MS#2 is OK) Secondary else (MS#2 Fails) Backup |

**MS Polling example**:
When selecting MS 1 (IP Only), MS 2 (IP only) and split report option 1st Backup 2nd (using the default primary, secondary and backup time intervals), the report process will be as follows:
In a normal state:
Polling through the IP network using the IP module will occur every 30 seconds according to the primary time interval to MS 1 and every 3600 seconds (1 hour) according to the secondary time interval to MS 2.
When communication to MS 1 fails, polling occurs every 30 seconds according to the backup interval to MS 2. When communication returns to MS 1, polling reverts back to the secondary time interval and occurs every 3600 seconds (1 hour) to MS#2

## Radio (LRT)

| Quick Keys | Parameter | Default | Range |
|---|---|---|---|
| ⑤①④ | **LRT (Long Range Transmission)** | | |
| | The LRT menu contains parameters for setting a system long-range radio communication network, using the Location Aided Routing (LARS) protocol (LARS, LARS1, or LARS2) or E-LINE protocol to facilitate detailed event transmission to monitoring stations. | | |
| ⑤①④❶ | **Account** | 0 | 0–00FFFF |
| | The number that recognizes the customer at the monitoring station. You can define an account number for each monitoring station. These account numbers are the 6-digit numbers assigned by the monitoring station. | | |
| | **Notes:** | | |
| | Account Number Communication Format: | | |
| | • The account number will always be reported as 4 digits, for example: A number defined as 000012 will be reported as 0012<br>• The account range depends on which protocol is in effect, as follows:<br>**Protocol** — **Range**<br>LARS — 0000–7779 (First 3 digits: 0–7 only)<br>LARS1 — 0000–1FFF<br>LARS2 — 0000–FFFF<br>If more than 4 digits were defined, the system always sends the last 4 digits of the account number, for example: Account number that was defined as 123456 will be sent as 3456. | | |
| ⑤①④❷ | **System** | 0 | LARS 0–3<br>LARS1 0–7<br>LARS2 0–F |
| | Use the one-digit system code to efficiently allocate transmitter reporting among monitoring stations. | | |
| ⑤①④❸ | **Periodic Test** | 00 | HR: 00–96<br>MIN 00–59 |
| | The Periodic Test enables you to set how often the system will automatically establish communication to the monitoring station in order to confirm operational functionality. The periodic test involves sending the account number and a valid test report code (Contact ID 602). | | |

| Quick Keys | Parameter | Default | Range |
|---|---|---|---|
| ⑤①④❹ | **No. Comm. Parameter** | 060 | 0-255 |
| | Specify the timeout threshold for establishing communication between the LRT and bus, which upon being reached, triggers an event report to the monitoring station. | | |
| ⑤①④⑤ | **Control** | 060 | 0-255 |
| ⑤①④⑤❶ | **Disable Low Battery** | Y | Yes/No |
| | **YES**: [For use when LRT is housed in the main LightSYS box] LRT low battery trouble condition will not be regarded.<br>**NO**: [For use when LRT is housed remotely in its own box] LRT low battery trouble condition will be regarded. | | |

## ⑤② Monitoring Station

The Monitoring Station menu contains parameters that enable the system to establish communication with the (up to three) monitoring stations and transmit data.

| Quick Keys | Parameter | Default | Range |
|---|---|---|---|
| ⑤②① | *Report Type* | | |
| | Defines the communication type that the system will establish with each monitoring station. The system can report in four optional communication channels:<br>①Voice<br>②IP<br>③SMS<br>④LRT | | |

| Quick Keys | Parameter | Default | Range |
|---|---|---|---|
| ⑤②①❶ | **Voice** | | |

Reports to the monitoring station will be done through the PSTN or GSM network. Reporting by Voice can be established through different channels. The optional channels depend on the hardware installed in your system. Select the required channel as follows:

1. **PSTN/GSM**: The system checks for the availability of the PSTN line. During regular operation mode all calls and data transmission are carried out using the PSTN line. In the case of trouble in the PSTN line, the line is routed to the GSM line.
2. **GSM/PSTN**: The panel checks for the availability of the GSM line. During regular operation mode all calls and data transmission are carried out using the GSM line. In the case of trouble in the GSM line, the line is routed to the PSTN line.
3. **PSTN Only**: The outgoing calls are executed through the PSTN audio channel only. Use this option for installations where no GSM line is available.
4. **GSM Only**: The outgoing calls are executed through the GSM audio channel only. Use this option for installations where no PSTN line is available.

Enter the monitoring station telephone number **including area code** and special letters (if required). If calling from PBX do not include the number for outgoing line.

| Function | Results |
|---|---|
| Stop dialing and wait for a new dial tone | W |
| Wait a fixed period before continuing | , |
| Send the DTMF * character | * |
| Send the DTMF # character | # |
| Delete numbers from the cursor position | [*] ⓪ simultaneously |

| | | | |
|---|---|---|---|
| ⑤②①❷ | **IP** | | |

Encrypted events are sent to the monitoring station over the IP or GPRS network using TCP/IP protocol. 128 BIT AES encryption is used. RISCO Group's IP/GSM Receiver Software located at the MS site receives the messages and translates them to standard protocols used by the monitoring station applications (For example; contact ID).

| Quick Keys | Parameter | Default | Range |
|---|---|---|---|
| | **Note:** To enable GPRS communication the SIM card has to support GPRS channel. | | |
| | Reporting by IP can be established through different channels. The optional channels depend on the hardware installed in your system. Select the required channel via the Configuration Software as follows:<br>1. **IP/GPRS**: The panel checks for the availability of the IP network. During regular operation mode all calls and data transmission are carried out using the IP network line. In the case of trouble in the IP network, the report is routed to the GPRS network.<br>2. **GPRS/IP**: The panel checks for the availability of the GPRS network. During regular operation mode all calls and data transmission are carried out using the GPRS. In the case of trouble the report is routed to the IP network.<br>3. **IP Only**: The report is executed through the IP network only.<br>4. **GPRS Only**: The report is executed through the GPRS network.<br>Enter the relevant IP and Port numbers for the MS that will receive reports from the system. (See *IP* and *Port*) | | |
| ⑤②①❸ | **SMS** | | |
| | Events are sent to the monitoring station using encrypted SMS messages (128 BIT AES encryption). Each event message contains information including the account number, report code, communication format, time of event and more. The event messages are received by RISCO Group's IP/GSM Receiver Software located at the MS/ARC site. The IP/GSM Receiver translates the SMS messages to standard protocols used by the monitoring station applications (For example; contact ID).This channel requires that RISCO Group's IP/GSM receiver has to be used at the MS side.<br>Enter the relevant phone numbers for the MS that will receive reports from the system. (See explanation in Voice type on page 151.) | | |
| ⑤②①❹ | **LRT** | | |
| | The LRT menu contains parameters for setting a system long-range radio communication network, using the Location Aided Routing (LARS) protocol (LARS, LARS1, or LARS2) or E-LINE protocol to facilitate detailed event transmission to monitoring stations. | | |

| Quick Keys | Parameter | Default | Range |
|---|---|---|---|
| ⑤②❷ | *Accounts* | | |

The number that recognizes the customer at the monitoring station. You can define an account number for each monitoring station. These account numbers are the 6-digit numbers assigned by the central station

**Notes:**

**Notes for Account Number in contact ID Communication Format**:

- The account number will always be reported as 4 digits, for example: A number defined as 000012 will be reported as 0012
- If more than 4 digits were defined, the system always sends the last 4 digits of the account number, for example: Account number that was defined as 123456 will be sent as 3456.
- In Contact ID you can place digits and letters A–F. The A character is always sent as 0 for example: Account number that was defined as 00C2AB will be sent as C20B.

**Notes for Account Number in SIA Communication Format:**

- Account number for SIA should be defined as a decimal number (Only digits 0..9)
- Account number can be reported as 1 to 6 digits. To send an account number with less than 6 digits use the “0” digit, for example: For account number 1234 enter 001234. In this case the system will not send the “0” digit to the monitoring station.
- In order to send the “0” digit in SIA format, located at the left side of the number, use the “A” digit instead of the “0” digit. For example, for account number 0407 enter 00A407, for a 6 digit account number such as 001207 enter AA1207.

| | | | |
|---|---|---|---|
| ⑤②❸ | *Communications Format* | | |

Enables the system to contact the monitoring station in order to obtain details of the communication protocol used by the digital receiver for each account.

**Note:**

See *Appendix D: Library Voice Messages*

- ❶ **Contact ID:** The system allocates Report Codes supporting ADEMCO Contact (Point) ID
- ❷ **SIA:** The system allocates Report Codes supporting the SIA (Security Industry Association) format

| Quick Keys | Parameter | Default | Range |
|---|---|---|---|
| ⑤②④ | *Controls* | | |
| | Allows to program controls related to operation with the monitoring station | | |
| ⑤②④❶ | **Call Save** | No | Yes/No |
| | **YES**: For reducing MS traffic congestion, the system holds all non-urgent events (for example, opening/closing reports, test transmissions) for up to 12 hours (programmable) and sends them as a batch at a less busy time, for example, at night. (Refer to Dialer: Periodic Test, page 143)<br>**NO**: All events are transmitted as they occur. | | |
| ⑤②④❷ | **Show Kissoff** | No | Yes/No |
| | **YES**: The keypad indicates when the dialer receives the *kissoff* signal from the MS's receiver.<br>**NO**: The keypad does not indicate on receipt of the *kissoff* signal. | | |
| ⑤②④❸ | **Show Handshake** | No | Yes/No |
| | **YES**: The keypad indicates when the dialer receives the *handshake* signal from the MS's receiver.<br>**NO**: No indication for establishing communication with the central station's receiver | | |
| ⑤②④❹ | **Audible Kissoff** | No | Yes/No |
| | **YES**: There is an audible sound emitted from the keypad when the dialer receives the *kissoff* signal from the MS's receiver.<br>**NO**: There is no audible sound on receipt of the *kissoff* signal. | | |
| ⑤②④❺ | **SIA Text** | No | Yes/No |
| | **Yes**: SIA format report to MS will support text transmission over the voice channel. Note ( the MS receiver should support the SIA Text protocol)<br>**No**: SIA format will not support text | | |

| Quick Keys | Parameter | Default | Range |
|---|---|---|---|
| ⑤②④❻ | **Random MS Testing** | No | Yes/No |
| | **Yes**: At power-up the panel will random set a test time between 00:00 and 23:59. Once the hour is set, this will be the fixed report hour of this panel. The time can be viewed under the Periodic test timer fields (⑤②⑥❶). The interval of sending the test will be as defined under the Periodic Test timer<br>**No**: The periodic test will be according to the time defined under the MS periodic timer (⑤②⑥❶). | | |
| ⑤②⑤ | *Parameters* | | |
| | Allows to program parameters related to operation with the Monitoring Station | | |
| ⑤②⑤❶ | **MS Retries** | 08 | 01–15 |
| | The number of times the LightSYS redials the MS after failing to establish communication. | | |
| ⑤②⑤❷ | **Alarm Restore** | | |
| | Specifies under what conditions an Alarm Restoral is reported. This option informs the MS of a change in the specified condition(s) during an alarm restore. These reports need a valid Report Code.<br>• ❶ `ON BTO` (Bell Time Out) - Reports the restoral after the audible alarm times out.<br>• ❷`FOLLOW ZONE` - Reports the restoral when the zone in which the alarm occurs returns to its non-violated (secured) state.<br>• ❸`AT DISARM` - Reports the restoral when the system (or the partition in which the alarm occurs) is disarmed, even if the siren has already timed out. | | |
| ⑤②⑥ | *MS Timers* | | |
| | Allows to program timers related to operation with the monitoring station | | |
| ⑤②⑥❶ | **Periodic Test** | | |
| | The Periodic Test enables you to set the time period that the system will automatically establish communication to the monitoring station in order to check the connection. The periodic test involves sending the account number and a valid test report code (Contact ID 602, SIA TX). Set the test time and daily interval for Periodic Test Reporting. | | |

| Quick Keys | Parameter | Default | Range |
|---|---|---|---|

Use the table below to specify the daily testing intervals (D)-effective from the day of programming:

| D | Meaning |
|---|---|
| 0 | Never |
| H | Every hour |
| 1 | Every day |
| 2 | Every other day |
| 3 | Every 3rd day |
| 4 | Every 4th day |
| 5 | Every 5th day |
| 6 | Every 6th day |
| 7 | Once a week |

| | | | |
|---|---|---|---|
| ⑤②⑥❷ | **Abort Alarm** | 15 secs | 15-45 seconds |

Defines the time delay before reporting an alarm to the MS. If the alarm system is disarmed within the abort window, no alarm transmission shall be sent to the MS.

| | | | |
|---|---|---|---|
| ⑤②⑥❸ | **Cancel Delay** | 5 mins | 00-255 minutes |

If an alarm is sent in error, it is possible for the MS to receive a cancel alarm code, sent subsequently to the initial alarm code. This happens if a valid user code is entered to reset the alarm in the cancel delay time window that starts after the defined abort alarm time is over.

**Note:**

Ensure that Cancel Alarm report code is defined.

| | | | |
|---|---|---|---|
| ⑤②⑥❹ | **Listen In** | 120 sec | 1–255 seconds |

The time duration for the monitoring station to listen in and perform voice alarm verification. After this period the system hang up the line.

The monitoring station can expand the listen in time during the conversation by pressing the digit “1” on the telephone (for a repeatable two minute extension). In this case, the Listen In time will reset and start over again.

Pressing "2" during Listen In time will switch to Talk mode. Pressing "*" during Listen In time will end the call.

| Quick Keys | Parameter | Default | Range |
|---|---|---|---|
| ⑤②⑥⑤ | **Confirmation** | | |
| | The confirmation times relate to the Zone Sequential Confirmation (Alarm Confirmation, see ②④) | | |
| ⑤②⑥⑤❶ | **Confirm Start (Confirm delay time)** | 000 | 1–120 minutes |
| | Specifies that the system cannot start a sequential confirmation process until the timer has expired. This time starts when the system has set and will prevent confirmed alarms being generated in situations when a person has been accidentally locked in the building. | | |
| ⑤②⑥⑤❷ | **Confirm Time Window** | 030 | 30–60 minutes |
| | Specifies a time period that starts when an alarm is triggered for the first time. If a second alarm is triggered before the end of the confirmation time window, the system will send a confirmed alarm to the monitoring station | | |
| ⑤②⑦ | *Report Split* | | |
| | The Report Split menu contains parameters that enable the routing of specified events to up to three MS receivers. | | |
| ⑤②⑦① | **MS Arm/Disarm** | 1st backup 2nd | |
| | Reports Arming/Disarming (meaning Closings/Openings) events to the MS<br>❶ Do not call (no report).<br>❷Send 1st: Reports Openings and Closings to MS 1.<br>❸Send 2nd: Reports Openings and Closings to MS 2.<br>❹Send 3rd: Reports Openings and Closings to MS 3.<br>❺Send all: Reports Openings and Closings to the all defined MS.<br>❻1st Backup 2nd: Reports Openings and Closings to MS 1. If communication is not established, calls MS 2.<br>❼ 1st Backup 2nd3rd: Reports to MS 1. If communication is not established calls MS 2. If communication is not established again calls the MS. | | |

| Quick Keys | Parameter | Default | Range |
|---|---|---|---|
| | ❽ 1st Backup 3rd Call 2nd: Reports MS 1. If communication is not established calls to MS 3. In addition it will also call MS 2.<br>❾2nd Backup 3rd Call 1st: Reports to MS 2. If communication is not established calls MS 3. In addition it will also call MS 1. | | |
| ⑤②⑦② | **MS Urgent** | 1st backup 2nd | |
| | Reports urgent (alarm) events to the Central Monitoring Station<br>❶ Do not call (no report)<br>❷Send 1st: Reports Openings and Closings to MS 1.<br>❸Send 2nd: Reports Openings and Closings to MS 2.<br>❹Send 3rd: Reports Openings and Closings to MS 3.<br>❺Send all: Reports Openings and Closings to the all defined MS.<br>❻1st Backup 2nd: Reports Openings and Closings to MS 1. If communication is not established, calls MS 2.<br>❼ 1st Backup 2nd3rd: Reports to MS 1. If communication is not established calls MS 2. If communication is not established again calls the MS.<br>❽ 1st Backup 3rd Call 2nd: Reports MS 1. If communication is not established calls to MS 3. In addition it will also call MS 2.<br>❾2nd Backup 3rd Call 1st: Reports to MS 2. If communication is not established calls MS 3. In addition it will also call MS 1. | | |
| ⑤②⑦③ | **MS Non Urgent** | | |
| | Reports non-urgent events (supervisory troubles and test reports) to the MS<br>❶ Do not call (no report)<br>❷Send 1st: Reports Openings and Closings to MS 1.<br>❸Send 2nd: Reports Openings and Closings to MS 2.<br>❹Send 3rd: Reports Openings and Closings to MS 3.<br>❺Send all: Reports Openings and Closings to the all defined MS.<br>❻1st Backup 2nd: Reports Openings and Closings to MS 1. If communication is not established, calls MS 2. | | |

| Quick Keys | Parameter | Default | Range |
|---|---|---|---|
| | ❼ 1st Backup 2nd3rd: Reports to MS 1. If communication is not established calls MS 2. If communication is not established again calls the MS.<br>❽ 1st Backup 3rd Call 2nd: Reports MS 1. If communication is not established calls to MS 3. In addition it will also call MS 2.<br>❾2nd Backup 3rd Call 1st: Reports to MS 2. If communication is not established calls MS 3. In addition it will also call MS 1. | | |
| ⑤②⑧ | *Report Codes* | | |
| | Enables you to view or program the codes transmitted by the system to report events (for example, alarms, troubles, restores, supervisory tests, and so on) to the monitoring station.<br>The codes specified for each type of event transmission are a function of the central station's own policies. Before programming any codes, it is important to check the central station protocols. Reporting codes are assigned by default, according to the selected communication format SIA or contact ID.<br>Assigns a specified report code for each event, based on the reporting format to the monitoring station. An event that is not assigned with a report code will not be reported to the monitoring station. For list of report events refer to *Appendix E Report Codes*<br>Using a double-zero (00) for any event will prevent a report from being generated. | | |

## ⑤③ Configuration SW

The **Configuration Software** menu contains parameters that enable the configuration software to establish connection with the system.

| Quick Keys | Parameter | Default | Range |
|---|---|---|---|
| ⑤③① | **Security** | | |
| | Enables you to set parameters for remote communication between the technician and the system using the configuration software | | |

| Quick Keys | Parameter | Default | Range |
|---|---|---|---|
| ⑤③①❶ | **Access Code** | 5678 | |
| | Enables you to define an up-to six-alpha-numeric-character installation access code.<br>In order to enable communication between the alarm company and the system the same access code must subsequently be entered into the corresponding account profile created for the installation in the configuration software<br>For successful communication, the access code along with the ID code must match between the configuration software and the system. | | |
| ⑤③①❷ | **Remote ID** | 0001 | |
| | Defines an ID code that serves as an extension of the access code.<br>In order to enable communication between the alarm company and the installation, the same remote ID code must be entered into the account profile in the configuration software.<br>For successful communication, the ID code along with the access code must match between the Configuration Software and the main panel.<br>Dealers often use the customer's monitoring station account number for the ID code, but you can use any 4-digit code unique to the installation. | | |
| ⑤③①❸ | **MS Lock** | **000000** | |
| | MS Lock is a security function used in conjunction with the configuration software. It provides greater proprietary security when viewing monitoring station parameters.<br>The same 6-digit code, which will be stored in the panel, must be entered into the corresponding account profile created for the installation in the configuration software.<br>If there is no match between the MS Lock code defined in the main panel and the MS Lock code defined in the configuration software, the installer will not have permission to change the following monitoring station parameters from the configuration software:<br>MS Lock, Installer Code, MS IP Port, MS IP Address, MS Phone, Default Enable, MS Account, MS Format, MS Channel, MS Backup, MS Enable, Remote ID, Access Code. | | |

| Quick Keys | Parameter | Default | Range |
|---|---|---|---|
| ⑤③❷ | **Call Back Phones** | 0001 | |
| | Define three numbers that the panel can call to perform Configuration Software communication. If no numbers have been defined, a call back can be performed to any phone. The installer will enter a phone number when establishing communication to the panel. If at least one number has been defined, it will be the only number that the call back can be established to.<br>When the Configuration Software establishes communication to the panel, it sends the panel its calling phone number. (This number needs to be defined as My Number under the GSM and PSTN Communication menu in the Configuration Software.)<br>If the panel identifies one of the numbers as one of the numbers predefined in the panel, the call will hang up and the panel will call back to that same number. | | |
| ⑤③③ | **Control** | | |
| ⑤③③ ❶ | **Call Back** | Yes | Yes/No |
| | The call back feature requires the system to call back to a pre-programmed telephone number to which the alarm company's configuration software computer is installed. This provides more security for remote operations using the configuration software<br>**YES:** Call back is enabled.<br>**NO:** Call back is disabled. | | |
| ⑤③③ ❷ | **User Initiated Call** | Yes | Yes/No |
| | **YES**: For a remote Configuration Software session to take place, the grand master must first enter specific keypad commands in the User Functions mode.<br>**NO**: Configuration Software operations are possible without requiring the user's participation. | | |

| Quick Keys | Parameter | Default | Range |
|---|---|---|---|
| ⑤③④ | **IP Gateway** | | |
| | The IP and port address of the configuration's software PC. If you have a router connected to the PC of the configuration software, then you should enter the IP of the router.<br>This definition will be used when there is a request to create a remote connection from the panel to the configuration software. The connection can be done over IP or GPRS.<br>**Note:**<br>In the configuration software, under Communication → Configuration → GPRS you should enter the IP address of the PC that the software is installed in. | | |

## ⑤④ Follow Me

In addition to reporting to the monitoring station, the LightSYS has a Follow-Me feature which enables reporting system events to predefined follow me destinations using a voice message, SMS message or Email. Up to 16 Follow Me destinations can be defined in the system.

**Note:**

If FM is enabled and no voice module is installed then "beeps" will be sent instead of messages.

| Quick Keys | Parameter | Default | Range |
|---|---|---|---|
| ⑤④① | **Define FM** | | |
| | Up to 16 Follow Me destinations can be defined in the system. Select a follow destination from the list | | |
| ⑤④①✪① | *Report Type* | | |
| | Defines the type of reporting events to a Follow Me destination. | | |

| Quick Keys | Parameter | Default | Range |
|---|---|---|---|
| ⑤④①✪①① | **Voice** | | |
| | Report to follow me will be done by voice message thorough the PSTN or GSM network. (See *Channel → For Voice Messaging* below). Enter the telephone number including area code or special letters for Follow Me defined as SMS or Voice.<br>Reporting events by Voice can be established through different channels. The optional channels depend on the hardware installed in the system. Select the required channel as follows:<br>❶ **PSTN/GSM**: The system checks for the availability of the PSTN line. During regular operation mode voice messaging is carried out using the PSTN line. In the case of trouble in the PSTN line, the line is routed to the GSM line<br>❷ **GSM/PSTN**: The panel checks for the availability of the GSM line. During regular operation mode voice messaging is carried out using the GSM line. In the case of trouble in the GSM line, the line is routed to the PSTN line<br>❸ **PSTN Only**: The outgoing calls are executed through the PSTN audio channel only. Use this option for installations where no GSM line is available<br>❹ **GSM Only**: The outgoing calls are executed through the GSM audio channel only. Use this option for installations where no PSTN line is available | | |
| ⑤④①✪①② | **EMAIL** | | |
| | Report to Follow Me will be done by e-mail thorough IP or GPRS. Each e-mail contains information including the system label. Event type and time. Enter the e-mail address for Follow Me destination defined as IP type.<br>❶ **IP/GPRS**: The system checks for the availability of the IP network. During regular operation, emails will be sent using the IP network line. In case of trouble in the IP network, the email is routed to the GPRS network.<br>❷ **GPRS/IP**: The system checks for the availability of the GPRS network. During regular operation mode emails will be sent using the GPRS. In case of trouble, the email is routed to the IP network.<br>❸ **IP Only**: The report is executed through the IP network only<br>❹ **GPRS Only**: The report is executed through the GPRS network only | | |

| Quick Keys | Parameter | Default | Range |
|---|---|---|---|
| ⑤④①✪①③ | **SMS** | | |
| | Report to Follow Me will be done by SMS. Each event message contains information including the system label, event type and time. Enter the telephone number including area code or special letters. | | |
| ⑤④①✪❷ | *Partition* | | |
| | Assign the partitions from which events will be reported to the Follow Me number. | | |
| ⑤④①✪③ | *Events* | | |
| | Each Follow Me destination can be assigned with its own set of events. Choose the events that will be reported to each Follow Me | | |

| Event | Description | Default |
|---|---|---|
| ① **Alarms** | | |
| ❶ Intruder | Intruder alarm in the system | Yes |
| ❷ Fire | Fire alarm in the system | Yes |
| ❸ Emergency | Emergency alarm in the system | Yes |
| ❹ Panic (S.O.S) | A panic alarm in the system | Yes |
| ❺ Tamper | Any tamper alarm in the system | No |
| ❻ Duress Alarm | Duress alarm in the system from user xx | Yes |
| ❼ Confirmed alarm | Confirmed alarm indication | No |
| ❽ No Movement | No movement report indication | No |
| ② **Arm/Disarm** | | |
| ❶ Arm | Arming operation has been performed in the system | No |
| ❷ Disarm | Disarming operation has been performed in the system | No |
| ❸ Parent Control | System armed/disarmed by user/remote control defined with the Parent control feature | No |
| ③ **Troubles** | | |
| ⓪❶ False Code | After three unsuccessful attempts of entering an incorrect code. | No |

| Event | Description | Default |
|---|---|---|
| ⓪❷Main Low Battery | Low battery indication from the LightSYS main panel (below 11V) | No |
| ⓪❸Wireless Low Battery | Low battery indication from any wireless device in the system | No |
| ⓪❹WL Jamming | Jamming indication in the system | No |
| ⓪❺WL Lost | Wireless device lost. When no supervision signal is received from a wireless device | No |
| ⓪❻AC Off | Interruption in the source of the main AC power. This activation will follow the delay time predefined in the AC Loss Delay timer | No |
| ⓪❼Bell Trouble | Bell trouble in the system | |
| ⓪❽Bus Trouble | Bus trouble in the system | |
| ⓪❾Siren low Battery | Low battery indication from any sounder in the system | |
| ❶⓪PSTN Trouble | PSTN lost event. If PSTN Loss Delay time period is defined, the message will be sent after the delay time | No |
| ❶❶ IP Network | Communication trouble with the IP network. | No |
| ④ **GSM** | | |
| ❶ GSM Trouble | General GSM trouble (Network availability, Network Quality, PIN code error, Module communication, GPRS password, GPRS IP fault, GPRS Connection, PUK code fault | No |
| ❷SIM Trouble | Any trouble with the SIM card | No |
| ❸SIM Expire | Report to Follow Me will be established 30 days before the SIM Expiration Time defined for a prepaid SIM card. | No |
| ❹SIM Credit | An automatic SMS credit message (or any other message) received from the provider's number predefined in *SMS Receive Phone* will be transferred to the Follow Me number | No |
| ⑤**Environmental** | | |
| ❶Gas Alert | Gas (natural gas) alert from a zone defined a Gas detector | No |
| ❷Flood Alert | Flood alert from a zone defined as flood type | No |

| Event | Description | Default |
|---|---|---|
| ❸CO Alert | CO (Carbon Monoxide) alert from a zone defined a CO detector | No |
| ❹High Temperature | High Temperature alert from a zone defined a Temperature detector | No |
| ❺Low Temperature | Low Temperature alert from a zone defined a Temperature detector | No |
| ❻Technical | Alert from the zone defined as Technical | No |
| ⑥**Miscellaneous** | | |
| ❶Zone Bypass | Zone has been bypassed | No |
| ❷Periodic test | Follow Me test message will be established following the time defined in the Periodic Test parameter under the MS parameters | No |
| ❸Remote programming | System is in remote installation mode | No |

| Quick Keys | Parameter | Default | Range |
|---|---|---|---|
| ⑤④①✪④ | *Restore Events* | | |
| | Choose the restore events that will be reported to each Follow Me destination. | | |

| Event | Description | Default |
|---|---|---|
| ① **Alarms** | | |
| ⓪❶ Intruder Alarm | Intruder alarm in the system restored | Yes |
| ⓪❷Tamper | Tamper alarm in the system restored | No |
| ② **Troubles** | | |
| ⓪❶ Main Low Battery | Low battery indication from the LightSYS main panel restored | No |
| ⓪❷WL Low Battery | Low battery indication from any wireless device in the system restored | No |
| ⓪❸Jamming | Jamming indication in the system restored | No |
| ⓪❹WL Lost | Wireless device lost restored | No |

| Event | Description | Default |
|---|---|---|
| ⓪❺AC Off | Interruption in the source of the main AC power restored | No |
| ⓪❻Bell Trouble | Bell trouble restored | |
| ⓪❼Bus trouble | Bus trouble restored | |
| ⓪❽Siren low Battery trouble | Siren low Battery trouble restored | |
| ⓪❾PSTN Trouble | PSTN lost event restored | No |
| ❶⓪IP Network | Communication trouble in the IP restored | No |
| ③**GSM** | | |
| ❶GSM Trouble | General GSM trouble restored | No |
| ④ **Environmental** | | |
| ❶Gas Alert | Gas Alert restored | No |
| ❷Flood Alert | Flood Alert restored | No |
| ❸CO Alert | CO Alert restored | No |
| ❹High Temperature | High Temperature Alert restored | No |
| ❺Low Temperature | Low Temperature Alert restored | No |
| ❻Technical | Technical Alert restored | No |

| Quick Keys | Parameter | Default | Range |
|---|---|---|---|
| ⑤④①✪❺ | *Remote Control* | | Yes/No |
| ⑤④①✪❺① | **Remote Listen** | No | Yes/No |
| | Enables the user of the Follow Me phone to perform remote listen and talk operation with the premises. | | |
| ⑤④①✪❺② | **Remote program** | No | Yes/No |
| | Enables the user of the Follow Me phone to enter the remote operation menu and perform all available programming options. For more details see the *LightSYS User Manual*. | | |
| ⑤④② | *Controls* | | |
| | Allows to program control related to operation with the Follow Me | | |

| Quick Keys | Parameter | Default | Range |
|---|---|---|---|
| ⑤④②❶ | **Disarm Stop Follow Me** | No | Yes/No |
| | **YES**: No follow me report during Stay arming for alarm or tamper<br>**NO**: Follow me report for alarm or tamper will be established during Stay arming. (Default). | | |
| ⑤④②❷ | **Disable Report at Stay** | No | Yes/No |
| | **YES**: No follow me report during Stay or Group arming for alarm or tamper<br>**NO**: Follow me report for alarm or tamper will be established during Stay arming. | | |
| ⑤④③ | *Parameters* | | |
| | Allows to program parameters related to operation with the Follow Me | | |
| ⑤④③❶ | **Follow Me Retries** | 03 | 01–15 |
| | The number of times the Follow Me phone number is redialed | | |
| ⑤④③❷ | **Voice Message Recurrence** | 01 | 01–05 |
| | This number of times a voice message repeats itself when establishing a call to a Follow Me number. | | |
| ⑤④③❸ | **Follow Me Periodic Test** | | 01–05 |
| | The Periodic Test enables you to set the time period that the system will automatically establish communication to a Follow Me destination defined with the Periodic Test event. (See page 143) | | |

### 6 Audio

This menu is used to define voice message parameters.

**Note**

This menu will be displayed only if a voice module had been assigned to the system

The Audio Messages menu is divided into the following sub menus:

⑥① Messages, below

⑥② Local Announcements, page 158

## ⑥① Messages

| Quick Keys | Parameter | Default | Range |
|---|---|---|---|
| ⑥① | **Messages** | | |

Use this menu to customize the spoken messages of Zones, Partitions, Outputs , Macro's and Opening Message that the Voice module announces when you access the system from a remote telephone or you hear on the premises.

There are 2 ways to customize a voice message:

1. **User recorded**: The ❶ *Common Message* and the ❻ *Library Messages* are user recorded messages. The recording can be done either from the microphone located on the voice module expander or from a microphone located on the Listen/Talk unit.

   **Note:**
   The definition of which microphone to use is determined by dip switch 4 located on the voice module board.

2. **Assign messages**: The Zone / Partition/ Output and Macro messages can be assigned with pre recorded messages. Each message can be comprised of up to 4 words. Each word has been pre-recorded and assigned a number. When comprising a message the installer will enter the number of each word into the message sequence. The system recognizes the numbers and sounds the words assigned to those numbers. For example: For the system to sound "Top Floor Guest Bedroom", you should enter the following sequence: 119 050 061 019. The table in Appendix D *Library Voice Messages* displays the directory of the pre-recorded programming descriptors, each is identified by a 3 digit number.

**Note:**
The first five descriptors allow for customized words specific for the client's needs. The customized words are the Library message on option ❻

After recording or assigning a message you can verify messages by selecting **[1] Play** option in each category.

| | | | |
|---|---|---|---|
| ⑥① ❶ | **Common Message** | | |

User-defined identification of the premises, for example, the address and/or telephone number of the premises. This message is up to 10 seconds long. The default Common message is ***Hello, this is your security system calling***.

| Quick Keys | Parameter | Default | Range |
|---|---|---|---|
| ⑥① ❷ | **Zone Message** | | |
| | User-defined name for the zone in which the event occurred, for example, Kitchen. The Zone message can be up to 2 seconds long, and is only announced when the Event announcement message concerns a zone. | | |
| ⑥① ❸ | **Partition Message** | | |
| | User-defined name for the partition in which the event occurred, for example, Kitchen. The Partition message can be up to 2 seconds long. | | |
| ⑥① ❹ | **Utility Output** | | |
| | Assigning voice messages for Utility Outputs simplifies the process of remotely operating them by enabling the user to hear a meaningful name, such as Heating, for each Utility Output. | | |
| ⑥① ❺ | **Macro** | | |
| | Assigning a voice messages to a Macro simplifies the meaning of the macro operation for the user. | | |
| ⑥① ❻ | **Library Message** | | |
| | User defined messages for the customer needs. Each messages is self recorded and can be up to 2 seconds long. | | |

## ⑥② Local Announcements

| | | | |
|---|---|---|---|
| ⑥② | **Local Announcement** | | |
| | Upon event occurrence, the system can announce the security situation to occupants of the premises by sounding a local announcement message from the Add on Listen/Talk unit. This announcement message can be enabled or disabled (via the toggle ), per event. Enable or disable each message announcement according to your customer request. | | |
| | **Parameter** | **Description** | **Default** |
| | ⓪❶ Intruder alarm | Intruder alarm | Yes |
| | ⓪❷ Fire alarm | Fire alarm | Yes |
| | ⓪❸ Emergency | Emergency (medical) alarm | Yes |
| | ⓪❹ Panic alarm | Panic alarm | Yes |

| | | |
|---|---|---|
| ⓪❺ Tamper alarm | Tamper alarm | Yes |
| ⓪❻ Environmental alert | Flood, Gas, CO or Temperature alert | Yes |
| ⓪❼ Away arm | System/Partition armed in Away(Full arm) | Yes |
| ⓪❽ Stay arm | System/Partition armed in Stay(Part set arm) | Yes |
| ⓪❾ Disarm | System/Partition disarmed | Yes |
| ❶⓪ Audible Status | Status heard when pressing the status button on the keypad/remote control | Yes |
| ❶❶ Entry / Exit | System in exit or entry delay | Yes |
| ❶❷ Auto arm | System in auto arm process | Yes |
| ❶❸ Output On/Off | Output activated or deactivated | No |
| ❶❹ Walk test | Walk test. The LightSYS will sound the zone number and description | Yes |

## 7 Install

The Install menu provides access to submenus that are used to add, remove or test accessories in the system.

The Install menu is divided into the following sub-menus:

⑦① Bus Device, below

⑦②Wireless Device, page 173

### ⑦① Bus Device

The BUS Device menu provides access to submenus and their related parameters that enable you to add to or remove BUS expansion modules. From this section you can also access system tests to check the quality of their connections to the 4-wire BUS, as described in the following sections:

This menu option allows you to set the of the LightSYS installation device, module and expander parameters and to verify the full operational functionality of installed hardware

① Automatic

② Manual

③ Testing

### Bus Devices: Automatic Setting

| Quick Keys | Parameter | Default | Range |
|---|---|---|---|
| ⑦①❶ | **Automatic** | | |

The Auto Settings menu enables you to perform automatic setting of the accessories connected to the system by using the BUS scanning feature.

**Note:**

By default, when entering Installer mode with the default DIP Switch 2 in ON position, the system will take you immediately to Auto Settings.

➢ **To automatically identify all the devices on the bus**

1. Press to begin the automatic `BUS SCANNING` (the Auto Settings process) in which it identifies all the devices on the bus. A list of the accessories that were found is displayed with the data definition that is required for each one.
2. Verify that the keypad displays all the devices you have connected (displayed with the data definition that is required

| Quick Keys | Parameter | Default | Range |
|---|---|---|---|

for each one). If a device does not appear, ensure that you have given it a unique ID.

3. Press to accept what is being displayed, to progress through configuration screens and to advance on to the next device found.
4. Repeat steps 2 and 3 until the presence of all devices has been confirmed and all parameters configured.

## Bus Devices: Manual Setting

| Quick Keys | Parameter | Default | Range |
|---|---|---|---|
| ⑦①② | **Manual** | | |
| | Use this option to manually add or remove a Bus accessory in the system. | | |
| ⑦①② ⓪❶ | **Keypad** | | |

➢ **STEP 1: To choose/modify a keypad type:**

1. Through the menu selection, the following display appears:

```
KEYPADS:
ID=01  TYPE=
```

2. Use the or keys to position the cursor over the keypad ID number for which you want to assign (or delete) a keypad. The first keypad must be assigned to the first ID number, which is `01`

**Note:**

Make sure that the keypad's physical ID number has been "dip switch" programmed as described in *Setting Bus Accessory ID Numbers*, page 33.

3. Place the cursor on the **TYPE** field and use the key to toggle between the options provided to select the keyboard type, as follows:
   - NONE
   - LCD, LCDP (Model RP128KP / RP128KPP)
   - LCDI , LCDPI ( Model RP432KP / RP432KP)
   - WLKP (1-Way Wireless keypad)

➢ **STEP 2: To Assign a Partition:**

4. After pressing to store your keypad choice. The following

| Quick Keys | Parameter | Default | Range |
|---|---|---|---|

display appears:

```
ASSIGN TO PAR:
KEYP=01     PAR=1
```

5. Assign keypad **01** to the selected partition using the **[1 to 4]** keys. This partition specifies the location of the keypad and is mainly used for quick arming. Pressing the Arm Key automatically arms the partition

**Note:**

1. Non-partitioned systems are regarded as Partition 1.
2. In partitioned systems, keypads can be selectively assigned to specific partitions.

Press to store your choice

➢ **STEP 3: To Assign Partition Accessibility:**

Specifies the partitions that are controlled by the specified keypad. Information about the selected partitions can also be viewed on the specific keypad.

6. After pressing to store your partition choice. The following display appears:

```
P=1234          KP=xx
YYYY            MASK
```

7. For each partition (1 to 4), use the key to toggle between [Y] YES and [N] NO

**Note:**

The **xx** represents the ID number of the keypad

8. Press . Define the keypad controls (Emergency keys, multi view and Exit beep at stay. For more info see page 176).
9. Press to repeat the process for other keypads in the system (up to 4).
10. Press to return to the previous programming level.

⑦①② ❶❷ **Zone Expander**

➢ **To choose/modify a zone expander**

1. Through the menu selection, the following display appears:

```
ZONE EXPANDER
ID=01  TYPE=NONE
```

2. Use the or keys to position the cursor over the Zone Expander's ID number for which you want to assign (or

| Quick Keys | Parameter | Default | Range |
|---|---|---|---|

delete). The first zone expander must be assigned to the first ID number, which is `01`.

**Note:**

Make sure that the Zone Expander's physical ID number has been "dip switch" programmed as described in in *Setting Bus Accessory ID Numbers*, page 33.

3. Place the cursor on the TYPE field and use the key to toggle between the options provided to select the keyboard type, as follows:

   - NZE08: 8 hardwired zone expander

**Note:**

When adding a Zone Expander NZE08 you should define the zones expander resistance compatibility, depending on the detectors you intend to connect to the expander. By default the resistance is set to 2.2K for EOL and DEOL termination (See Zones resistance table ②①③ page 105)

4. Press to confirm (and store) your choice
5. Repeat the process for other Zone Expanders in the system

## ⑦①② ❶❸ Utility Output

➢ **To choose/modify a utility output**

1. Through the menu selection, the following display appears:

```
UTIL OUTPUT:
ID=01  TYPE=
```

2. Use the or keys to position the cursor over the UO's ID number for which you want to assign (or delete) a utility output. The first UO must be assigned to the first ID number, which is `01`.

**Note:**

Make sure that the UO's physical ID number has been "dip switch" programmed as described in Setting Bus Accessory ID Numbers, page 33.

3. Place the cursor on the TYPE field and use the key to toggle between the options provided to select the UO type, as follows:

   - NONE

| Quick Keys | Parameter | Default | Range |
|---|---|---|---|

- UO04 (a 4-Output Relay-Type Unit)
- UO08 (an 8-Output Solid-State Type Unit)
- XO08 (the X-10 Transmitting Module)
- UO02 (2-Output Relay Type located on the 3A switched power supply expansion module or wireless expander)

4. Press to confirm (and store) your choice.
5. Repeat the process for any other Utility Output modules in the system (up to the system's maximum of four, depending on your installed model).
6. Press to return to the previous programming level.

   If a Utility Output module is found and `NONE` has been selected, the following display appears:

   ```
   **DELETE**
   ARE YOU SURE?  N
   ```

   Press to return to the prior display.

   **-OR-**

7. Press to select **Y YES** and press to confirm the delete.

⑦①② ❶❹ **Power Supply**

➢ **To choose/modify a power supply**

1. Through the menu selection, the following display appears:

   ```
   POWER SUPPLY:
   ID=01  TYPE=
   ```

2. Use the or keys to position the cursor over the power supply ID number for which you want to assign (or delete) a power supply. The first PS must be assigned to the first ID number, which is `01`.

   **Note:**

   Make sure that the power supply's physical ID number has been "dip switch" programmed as described in in *Setting Bus Accessory ID Numbers*, page 33.

3. Place the cursor on the TYPE field and use the key to toggle between the options provided to select the power supply type, as follows:

   - NONE

| Quick Keys | Parameter | Default | Range |
|---|---|---|---|

- PS02: 3A power supply

4. Press . The following display appears:

```
P=1234          PS=1
  YYYY
```

5. Use the or keys and the key to assign the partitions.
6. Press The following display appears:

```
Controls:   PS=1
1)BELL/L.SPEAKN
```

If a bell siren or loudspeaker is connected to the Power Supply module, press to select **Y** YES; otherwise, press .

**Note:**

If YES is selected, the system will look for, detect, and sound any problems in the sounder circuit.

7. Repeat the process for any other power supply modules in the system, up to the system's maximum of four, depending on your installed model
8. If a power supply module is found and NONE has been selected, the following display appears:

```
  **DELETE**
ARE YOU SURE?  N
```

9. Press to select **Y** YES and press to confirm.

⑦①② ❶❺

## Wireless Expander

The LightSYS can support up to two wireless modules. Each module can support up to 32wireless zones and 16 multi function key fobs (For additional information refer to *LightSYS Wireless Receiver Installation Manual.)*

➢ **To Allocate a Wireless receiver**

1. Through the menu selection, the following display appears:

```
Wireless Module:
ID=1  TYPE=WM
```

2. Set the receiver ID (1 or 2) and using , set the type to **WL** and press .
3. The following display appears:

WME=X: BYPASS
BOX TAMPER ?

| Quick Keys | Parameter | Default | Range |
|---|---|---|---|

If the receiver is mounted inside the LightSYS box select Y to bypass the box tamper. Confirm with

4. Repeat the process for the second wireless expander

⑦①② ❶❻ **Proximity Key Reader**

➢ **To choose/modify a proximity key reader**

1. Through the menu selection, the following display appears:
   KEY READER:
   ID=01 TYPE=PKR
2. Use the or keys to position the cursor at ID=1 and type in the Proximity Key Reader ID number as defined by the dip switches that you set when you installed the module.
3. With the cursor positioned at the TYPE field, use the key to toggle and choose the PKR option
4. Press . The following display appears:
   P=1234 KR01
   Y... MASK
5. Use the or keys and the key to assign the partitions that will be affected by the instant arm function
6. Press . The following display appears:
   Controls: PKR=1
   Use the or keys to scroll the list and the key to toggle and choose the required option
   ❶INSTANT ARM?
   - If Yes, the partitions will be armed instantly.
   - If No, the Exit Delay time period will be applied

   ❷SHOW READY?
   - If YES, the ready status will be indicated on the reader.
   - If No, no ready status indication will be indicated on the reader

   ❸SHOW ARM?
   - If YES, the Arm status will be indicated on the reader.
   - If No, no Arm status indication will be indicated on the reader

   ❹SHOW STAY?

| Quick Keys | Parameter | Default | Range |
|---|---|---|---|

- If YES, the Stay status will be indicated on the reader.
- If No, no Stay status indication will be indicated on the reader

❺ SHOW BYPASS?

- If YES, the Bypass status will be indicated on the reader.
- If No, no Bypass status indication will be indicated on the reader

7. Press

⑦①② ❶❼

## Voice Module

➢ **To specify the voice module expander parameters**

1. Through the menu selection, the following display appears:
   VOICE MODULE
   TYPE=VOICE
2. With the cursor positioned at the TYPE field, use the key to toggle and choose the VOICE option..
3. Press . The following display appears.:
   ENTER R. PHONE
   CODE: 00
4. Enter a remote phone code and press . The remote code is used when calling the system from a remote phone.

⑦①② ❶❽

## Sounder

➢ **To specify and configure a sounder (siren)**

1. Through the menu selection, the following display appears:
   OUT DOOR SIREN:
   ID=1 TYPE=NONE
2. Use the or keys to position the cursor over the **ID** number to which you want to assign and configure the siren.
3. With the cursor positioned at the TYPE field, use the key to toggle and choose the siren option:
   - NONE
   - SIRN (Prosound A)
   - SIRN2 (ProSound B)

| Quick Keys | Parameter | Default | Range |
|---|---|---|---|

- LUM8 (Lumin 8, See page 46)

4. Press . The partition display appears:
   P=1234 S=1
   Y...
5. Use the or keys and the key to assign that partition to the siren.
6. Press . The following display appears.:
   SIREN= 1
   SOUND? Y
7. Use the key to toggle Y Yes or N No to activate or deactivate the sound.
8. Press . The following display appears.:
   SIREN= 1
   SQUAWK SOUND? Y
9. Use the key to toggle Y Yes or N No. If yes, the siren will sound one squawk to indicate the armed status.
10. Press . The following display appears.:
    SIREN= 1
    SQUAWK STROBE? Y
11. Use the key to toggle Y Yes or N No. If yes, the siren will flash to indicate the armed status.
12. Repeat above steps for other sirens if needed.

⑦①② ⓪❾

## BUS Zones

Up to 32 addressable bus detectors can be assigned to the LightSYS. Bus detectors can be wired to the main bus or to a Bus Zone Expander (BZE). For full installation instructions refer to the instructions supplied with each bus detector.

➢ **To specify and configure a bus zone detector**

1. Through the menu selection, the following display appears:
   BUS ZONE: (01)
   (0:01)TYPE=NONE

**Note:**

The display "(x:yy) Type: None" represent the BUS detector location in the system. In the 0:yy designation, the 0 represents that the bus detector is on the main unit and is not assigned to a

| Quick Keys | Parameter | Default | Range |
|---|---|---|---|
| | Bus Zone Expander. The yy represents the bus detector ID number (up to 32) as set by the detector's DIP switches.. | | |

2. Use the or keys to position the cursor over the ID filed and enter the Bus Zone ID number that you are assigning or deleting. Make sure that the detector's physical ID number is identical to the ID number you select during programming.
3. Using the arrow keys move to the Type field. Use the key to toggle and select the detector's type:
   - OPR12: WatchOUT PIR
   - ODT15: WatchOUT DT
   - WatIN: WatchIN
   - ILun3: Industrial Lunar Grade 3
   - iDTG3: iWISE DT Grade 3
   - iQUG3: iWISE QUAD Grade 3
   - iDTG2: iWISE DT Grade 3
   - iQUG2: iWISE QUAD Grade 2
   - BZ1: Single BUS zone expander
4. Press to confirm. Repeat the process for the other bus detectors

**Note:**

The iWISE BUS detectors have additional input on board. When selecting iWISE Bus detector the following question will appear: "*Link Bus Detector to zone xx?* " Selecting Yes will assign the input as the consecutive zone of the selected iWISE Bus detector.
For example: If Bus detector with ID 0:01 (Zone 1 in the system) is defined as iQUG3 then the input of the zone will be assigned as Zone 2.

⑦①② ❶❍ **GSM**

➢ **To specify and configure an installed GSM/GPRS module**

1. Through the menu selection, the following display appears:
   `GSM MODULE`
   `TYPE=NONE`
2. With the cursor positioned at the `TYPE` field, use the key to toggle and choose the `GSM` option.

| Quick Keys | Parameter | Default | Range |
|---|---|---|---|

3. Press to store your choice

**Note:**

If GSM/GPRS module is found and NONE has been selected, press to return to the prior display -OR- press to display a confirm delete screen.

⑦①② ❶❶ **IP**

➢ **To specify and configure an installed IP module**

1. Through the menu selection, the following display appears:
   `IP MODULE`
   `TYPE=NONE`
2. With the cursor positioned at the `TYPE` field, use the key to toggle and choose the `IPC` option.
3. Press to store your choice

**Note:**

If IP module is found and NONE has been selected, press to return to the prior display -OR- press to display a confirm delete screen

⑦①② ❶❷ **Modem**

The Fast PSTN Modem enables PSTN communication at 2400 Bps between a remote PC and the LightSYS security panel when programming the system using the Configuration Software.

➢ **To specify and configure an installed fast PSTN modem**

1. Through the menu selection, the following display appears:
   `Modem:`
   `TYPE=NONE`
2. With the cursor positioned at the `TYPE` field, use the key to toggle and choose the `Modm` option.
3. Press to store your choice

**Note:**

If IP module is found and NONE has been selected, press to return to the prior display -OR- press to display a confirm delete screen.

| Quick Keys | Parameter | Default | Range |
|---|---|---|---|
| ⑦①② ❶❸ | **Bus Expander** | | |

The BUS Zone Expander enables to expand the number of BUS detectors connected to the LightSYS to 32. Up to 4 Bus expanders can be defined. Each BUS Zone Expander creates a separate BUS loop that is used only for the BUS detectors connected to it. The separate BUS loop increases the total system security in case a certain BUS detector is sabotaged.

➢ **To specify and configure Bus expander**

1. Through the menu selection, the following display appears:
   `BUS Expander:`
   `TYPE=NONE`
2. With the cursor positioned at the `TYPE` field, use the key to toggle and choose the `BZE32` option
3. Press to store your choice

| | | | |
|---|---|---|---|
| ⑦①② ❶❹ | **LRT (Long Range Transmitter)** | | |

➢ **To specify and configure LRT**

1. Through the menu selection, the following display appears:
   `LRT Module:`
   `TYPE=NONE`
2. With the cursor positioned at the `TYPE` field, use the key to toggle and choose the `MAT` option
3. Press to store your choice

## Bus Devices: Testing

| Quick Keys | Parameter | Default | Range |
|---|---|---|---|
| ⑦①③ | **Testing** | | |

The testing menu is used to perform system bus and module testing, scanning and verification functions

| | | | |
|---|---|---|---|
| ⑦①③❶ | **Bus Test** | | |

The Bus Test menu enables the LightSYS to check the communication between the main panel and each of the system's expansion modules.

➢ **To perform BUS test**

| Quick Keys | Parameter | Default | Range |
|---|---|---|---|

Through the menu selection ⑦①③❶, the bus testing begins to check the connections between the devices on the bus, and the following display appears briefly:

```
BUS TEST:
>--XXXXXX--<
```

The system then displays the programmed device, its address, and the quality of the communication, expressed as a percentage, as shown in the following examples:

```
BUS COM QUALITY:
VOICE:01  =100% ↓
BUS COM QUALITY:
LCDPI:01  =99% ↓
```

A result of less than 100% means that there are bus connection problems (for example, bad wiring or cabling located in a harsh electrical environment or two modules in the same family have been given the same ID number)

⑦①③❷ **Bus Scan**

The Bus Scanning menu scans the bus and reports all modules found

➢ **To verify the bus ↔ expander connections**

1. Through the menu selection, the bus scanning begins, and the following display appears briefly:

```
BUS SCANNING:
 XXXXXXXXXXXX
```

2. Scroll down the list of accessory devices to ascertain that all keypads and expansion modules in the installation have been detected by the scan, as shown in the following examples:

```
BUS SCANNING:
TYP=WM     ID=01↓

BUS SCANNING:
TYP=LCPDI  ID=01↕

BUS SCANNING:
TYP=VOICE  ID=01↑
```

The system displays each programmed device and its address

⑦①③❸ **Verify Module**

The Verify Module menu provides a verification list of the modules in accordance with the modules you defined in the ⑦① **Bus Device** menu (page **160**) automatically or manually.

| Quick Keys | Parameter | Default | Range |
|---|---|---|---|

➢ **To verify the bus's recognition of each programmed device and its address**

1. Through the menu selection, the following display appears:

```
VERIFY MODULE:
VOICE:01 =VOICE↓
```

2. Use the ① or keys to scroll down the list of displayed accessory devices (shown in the examples below) to ascertain that all keypads and expansion modules in the installation have been identified correctly.

```
VERIFY MODULE:
LCPDI:01  =LCPDI↕
VERIFY MODULE:
WM  :01   =WM↕
```

The system displays each programmed device, its address, and whether or not it's found on the bus. This helps you to identify programming mistakes.

## ⑦② Wireless Devices

The Wireless Devices menu provides access to sub-menus that are used for allocating and deleting wireless devices in the sysytem. The Wireless Devices menu is divided into the following sub-menus:

① RX Calibration

② Allocation

③ Delete

**Note:**

Allocation wireless devices in the system can be performed only if a wires expander module has been defined in the system.

| Quick Keys | Parameter | Default | Range |
|---|---|---|---|
| ⑦②❶ | **RX Calibration** | | |

**Note**

Allocation is step two of the three step Wireless Device Defining process.
See Step 1: Allocating a wireless receiver ⑦①②❶❻ p. 165
Step 3: Allocation ⑦②②, below

| Quick Keys | Parameter | Default | Range |
|---|---|---|---|

The calibration measurement shows the amount of background 'noise' that the receiver can 'hear' on the same frequency as the RISCO wireless devices. This 'noise' could be neighboring devices of another system or other devices operating on the same frequency nearby. These are 'unwanted' signals that the LightSYS wireless receiver must be told 'not to listen to' in order to eliminate false jamming alarms.

The threshold noise level can be established automatically or manually

➢ **To measure and set wireless device RF noise thresholds**

1. Through the menu selection, the following display appears:

   ```
   Choose Receiver:
    1)ID:1 TYP:WM
   ```

2. Select the wireless zone expander for which you want to establish the threshold level and press . The following display appears, showing the current threshold level:

   ```
   THOLD=XX      WM1
   RE-CALIBRATE?   N
   ```

3. To perform a new automatic calibration, use the key to select **Y** Yes. After the calibration process is finished, the new receiving threshold is displayed, as follows:

   ```
   THOLD=XX      WM:1
   NEW THOLD=YY
   ```

4. To confirm the new threshold, press , -OR- to change the threshold manually, enter the required level and then press .

**Note:**

In order to ensure that a momentary high noise level (due to environmental reasons) will not cause a jamming alarm, you can set the threshold level to be higher than the calibrated level.

⑦②② **Allocation**

**Note:**

Allocation is step three of the three step Wireless Device Defining process.

See Step 1: **Allocating a wireless receiver** ⑦①②❶❺ p. 165

Step 2: **RX Calibration** ⑦②①, above

| Quick Keys | Parameter | Default | Range |
|---|---|---|---|

Each wireless device must identify itself to the system receiver, in a process termed "enrollment".

Enrollment can be performed by sending an RF signal from each device, or by typing the device's unique serial code into the system. Enrollment can be done locally using the keypad or remotely using the configuration software.

LightSYS supports up to two wireless expanders. If two WL receivers are allocated in the system, the first screen in the wireless devices allocation menu series requires you to specify to which receiver the device should be allocated:

```
Choose Receiver
1)ID1 TYP:WM
```

**Note:**

The number of wireless expanders present affects only the total possible set of keypads: two keypads per each expander for a maximum of four. The maximum 32 zones and 16 keyfobs are irrespective of the presence or absence of a second expander.

⑦②② ❶ **By RF**

➢ **To allocate a wireless device:**

1. Select 1) By RF and press .
2. Select the receiver to be used for the registration mode.
3. Select category ( 1)Zone, 2)Keyfob, 3)Keypad) and press .
4. Using the numeric keys, enter the desired device number and press
5. The WL Receiver is in learn mode. Send a write message from your wireless device.
6. Continue entering the wireless zones attributes section.

⑦②② ❷ **By Code**

Same procedure as described in RF allocation (above) with the difference that instead of sending RF transmission you should enter the 11 digit serial number of the device followed by to confirm.

⑦② ❸ **Delete**

Use this sub-menu to delete a wireless device.

## 8 Devices

The Devices menu provides access to submenus and their related parameters that enable you to manually configure and modify installed system devices.

The Devices menu is divided into the following sub-menus (as per your set of system-installed-devices):

⑧① Keypad, below

⑧② Keyfob, page 177

⑧③ Sounder, page 177

⑧④ Proximity Reader, page 181

⑧⑤ 3A Power Supply, page 181

| Quick Keys | Parameter | Default | Range |
|---|---|---|---|
| ⑧① | **Keypad** | | |

1. Select a keypad and press .
2. The following parameters can be defined for each BUS keypad:

❶ `Label:` A label identifying the keypad in the system.

❷ `Partition:` This partition specifies the location of the keypad and is mainly used for quick arming

❸ `Masking:` Specifies the partitions that are controlled by the specified keypad.

④ `Controls`

Advance through the parameters to be controlled:

❶ Emergency

The keypad's emergency keys can be enabled or disabled per keypad.

**Yes**: Enable the operation of the keypad's emergency keys.

**No**: Disable the operation of the emergency keypad's keys.

❷ Multi view

**Yes**: The keypad will display the status of all masked partitions.

**No**: The keypad will display only the status of its partition.

❸ Exit beeps— Sounds beeps during exit time in stay arming.

See page 67

## ⑧② Keyfob

| Quick Keys | Parameter | Default | Range |
|---|---|---|---|
| ⑧② | **Keyfob** | | |

The keyfob menu defines the operation of the wireless buttons keys. Each keyfob consists of 4 buttons, and each button can be programmed to a different mode of operation.

1. The first step in the menu is to select a user. Each user has a single keyfob. When selected press .
2. Select a button (1-4) and define the button operation according to the options below. **Note**: Each key has its own list of options. The list varies between the keys.
   The available modes of operation are:
   - ❶ **None**: Button disabled.
   - ❶ **Arm**: The button is used for away (full) arming of the assigned partitions.
   - ❷ **Disarm**: The button is used for disarming its assigned partitions.
   - ❸ **Stay**: The button is used for stay (home) arming of the assigned partitions.
   - ❹ **Group**: The button is used for Group arming (Partial arming within a partition / area) of the assigned partitions.
   - ❺ **UO**: The button is used to operate a single utility output
   - ❻ **Panic**: The button is used to send a panic alarm.

**Note:**

Away or STAY arming can be defined as instant or delayed (Exit Delay).

The available options for each button are:

Button 1 ( ): None, Arm. Stay, Group, UO

Button 2 ( ) : None, Disarm, UO

Button 3: None, Arm. Stay, Group, UO, Panic

Button 4: None, Arm. Stay, Group, UO

## ⑧③ Sounder

The Sounder menu enables to define all parameters of external sounder that can be connected to the LightSYS as a bus accessory.

The Sounder menu is divided into the following sub-menus

① Parameters

② Lamp Times

**Note**

Access to this sub-menu requires that a sounder device is installed on your site. For details, see page 160

| Quick Keys | Parameter | Default | Range |
|---|---|---|---|
| ⑧③① | **Parameters** | | |
| | Use this menu to define all parameters of the siren. Note that some parameters are only relevant to a specified siren.<br>Select a sounder and press . | | |
| ⑧③① ✪❶❶ | **Label** | | |
| | As appropriate, rename the sounder's label, as per the key definitions on page 52. | | |
| ⑧③① ✪⓪② | **Strobe** | | |
| | Use this menu to define parameters relating to the sounder strobe | | |
| ⑧③①✪<br>⓪②① | **Control** | Follow Bell | |
| | Defines the strobe operation mode.<br>❶ ALWAYS OFF - The strobe is deactivated.<br>❷FOLLOW BELL — The strobe is activated when the siren bell is triggered.<br>❸FOLLOW ALARM — The strobe is activated when an alarm occurs in the selected siren's partitions. | | |
| ⑧③①✪<br>⓪②② | **Blink** | 40 | |
| | Defines the number of times that the strobe will blink in a minute.<br>❶ 20 [Times/Min]<br>❷30 [Times/Min]<br>❸40 [Times/Min]<br>❹50 [Times/Min]<br>❺60 [Times/Min] | | |

| Quick Keys | Parameter | Default | Range |
|---|---|---|---|
| ⑧③① ✪⓪②❸ | **Arm Squawk** | 01 | 01-20 (seconds) |
| | The time that the strobe will blink when the system is armed. | | |
| | **Note:** | | |
| | If the siren's squawk strobe is defined as NO (Refer to the add/delete module, ⑦①②❍❽ page 167) this parameter will be ignored. | | |
| ⑧③① ✪⓪③ | **Siren LED** | Follow Arm | |
| | Defines the operation mode of the Status LED2.<br>❶ ALWAYS ON — The status LED2 is always on.<br>❷ ALWAYS OFF — The status LED2 is deactivated.<br>❸ FOLLOW ARM — The status LED2 is activated when any of the siren selected partition is armed (Away or Stay mode).<br>❹ FOLLOW ALARM - The status LED 2 is activated after any alarm condition.<br>❺ ALTERNATE (***Only for Lumin8***) — The status LEDs will constantly alternate.<br>❻ FLASH (***Only for Lumin8***) — The status LEDs will constantly flash. | | |
| ⑧③① ✪❍❹ | **Battery Load Test** | Every 24 Hours | |
| | Enables to set the time period that the LightSYS will automatically generate a Load test on<br>❶ NEVER: The system will not set a battery load test<br>❷ EVERY 24 HOURS | | |
| ⑧③① ✪❍❺ | **Proximity Level Response** | 3 | 0-9 (seconds) |
| | ***(Only for ProSound)***<br>Defines the time (seconds) for which a proximity violation must exist before the siren triggers an anti-approach alarm. The option 0 indicates that the proximity is deactivated. | | |
| ⑧③① ✪❍❻ | **Volume** | 9 | 0-9 (seconds) |
| | Sets the siren's internal speaker Alarm volume. The volume ranges between 0 (silent) to 9 (Max volume). After setting/changing the volume, sound will be emitted by the internal speaker to enable evaluation of the selected volume level. | | |

| Quick Keys | Parameter | Default | Range |
|---|---|---|---|
| ⑧③① ✪⓪⑦ | **Lamp** | | |
| | Use this menu to define parameters of the sounder external Lamp. | | |
| ⑧③①✪⓪⑦① | **Type** | | |
| | Defines the way the external lamp will be operated.<br>❶ ALWAYS ON–The lamp is always on.<br>❷ ALWAYS OFF–The lamp is always off.<br>❸ SCHEDULER– The lamp operates according to the time defined under the Sounder Lamp menu (Quick Key: ⑧③②). | | |
| ⑧③①✪⓪⑦① | **Brightness** | 05 | (01–10%) |
| | Used to set the brightness level of the external lamp. | | |
| ⑧③①✪⓪⑧ | **Power Source** | SAB | SAB/SCB |
| | ***(Only for Lumin 8)***<br>Used to define the SAB or SCB power source mode of the LuMIN8.:<br>❶ SAB—Power supply for the sounder will be drawn from the control panel.<br>❷ SCB—Power supply for the sounder will be drawn from the sounder's rechargeable battery. | | |
| ⑧③①✪⓪⑨ | **Siren Current** | Standard | Standard/Low |
| | ***(Only for Lumin 8)***<br>Set the sounder current mode.<br>❶ LOW – The sounder output will be reduced to 106dB 150mA.<br>❷ STANDARD - The sounder output will be 112dB 350mA (assuming single piezo head). | | |
| ⑧③① ✪①⓪ | **Alarm Sound** | | |
| | ***(Only for Lumin 8)***<br>Set the type of the alarm sound. Specify which of four alarm sounds is associated with this siren. | | |

| Quick Keys | Parameter | Default | Range |
|---|---|---|---|
| ⑧③② | **Lamp Times** | | |
| | Specify here the sounder lamp illumination duration.<br>❶ Lamp Start–Specify here the start time for the sounder lamp to be activated.<br>❷ Lamp Stop —Specify here the stop time for the sounder lamp to be deactivated. | | |

## ⑧④ Proximity Key Reader

This menu enables to define or modify parameters of Proximity Key Reader that can be connected to the LightSYS as a bus accessory. Up to 8 PKR's can be connected to the LightSYS. From the menu Select a PKR and press .

**Note**

Access to this sub-menu requires that a Proximity Key reader device is installed on your site.

| Quick Keys | Parameter | Default | Range |
|---|---|---|---|
| ⑧④✪❶ | **Masking** | | |
| | Specifies the partitions that are controlled by the specified PKR.<br>Press to display the partition application screen:<br>P=1234 KR=1<br>Y MASK<br>Use the key to toggle Y/N)to set the partitions. | | |
| ⑧④✪② | **Control** | | |
| | Use this menu to define controls of the PKR. Scroll the list and use the key to toggle Y/N for each option. (See page 166)<br>❶INSTANT ARM?<br>❷SHOW READY?<br>❸SHOW ARM?<br>❹SHOW STAY?<br>❺SHOW BYPASS?<br>When done press to save your settings. | | |

## ⑧⑤ 3A Power Supply

This menu enables to define or modify parameters of 3A switched power supply connected to the LightSYS as a bus accessory. Up to 4 power supplies can be connected to the LightSYS.

From the menu Select a power supply and press .

| Quick Keys | Parameter | Default | Range |
|---|---|---|---|
| ⑧⑤✪① | **Masking** | | |
| | Specifies the partitions that the power supply is assigned to.<br>Press to display the partition application screen:<br>`P=1234 PS=1`<br>`YYYY`<br>Use the key to toggle Y/N to set the partitions. | | |
| ⑧⑤✪② | **Control** | | |
| | Use this menu to define controls of the power supply. Use the key to toggle Y/N for each option:<br>❶ `BELL/L.SPEAK:` | | |

# Chapter 5 Using the Installer Non-Programming Menus

This chapter describes the parameters and programming options available to the installer that are not under the **Programming Menu**. .

Your LightSYS comes with a variety of selectable functions available to the installer, user and Grand Master. This section lists the complete menu of installer-configurable functions, the most frequently used of which are described in detail in previous chapters of this manual.

The following table shows the installer-configurable keypad operations.

## Activities Menu

| Activities | | |
|---|---|---|
| **Keypad Sound** | | |
| | Chime | |
| | | *Keypad Chime*—Allows user control (turning ON and OFF) of the current keypad's internal sounder for any function involving the Chime feature.<br>*Partition Chime*— Allows user control (turning ON and OFF) of all keypad's buzzers in the partition for any function involving the Chime feature) |
| | Buzzer On/Off | |
| | | Used to control the (Turning ON and OFF) the current keypad's internal buzzer during both Entry and Exit Delay time periods and all fire and burglar alarms. |

## Follow Me

| Follow Me | |
|---|---|
| **Define** | |
| | *Destination:* Used to define (up to 16) Follow Me destinations according to its type: Voice message, SMS or E-mail. For more information, refer to page 150 |
| | *Label:* Identifying labels for the Follow Me destination. Fill in the labels according to the instruction defined for user label on page 52 |
| **Terminate Follow Me** | |
| | If Follow Me Destination(s) were chosen, their operation can be terminated. Use this function when an alarm has been tripped and there is no need to utilize the Follow Me feature. |
| **Test Follow Me** | |
| Used to test Follow Me reporting. | |

## View Menu

### View

#### Trouble

Should be used when the system has detected a problem, which is evidenced by the rapid flashing of the Power icon, as described in the *LightSYS LCD Keypad Manual*.

#### Alarm Memory

Displays the five most recent alarm conditions stored by the system

#### Partition Status

Allows the viewing of the partitions' status and all “not ready” zones in the system.

**Note:**

- Pressing on the key from the normal operation mode displays the status of the partition to which the keypad is assigned.
- Pressing the sequence [CODE] from the normal operation mode will display the status of all the partitions assigned to the user code.

#### Zone Status

Allows the display of all system zones and their current status.

#### Service Information

Allows the display of any previously entered service information and the system version.

#### IP Address

Use this option to view the IP address of the LightSYS. This option is available only if IP module is defined in the system.

## Clock Menu

### Clock

#### Time & Date

Use this option to set the system time and date, in the format: `HH:MM DD/MM/YY`. This definition is required for setting the scheduler programming in the system.

### Scheduler

Weekly — Enables you to define up to four weekly programs with up to two time intervals per day, during which the system automatically arm/disarm, activates utility output, or prevents users from disarming.

One Time — Enables a one-time operation of automatic arm/disarm of the system at a specific time within the next 24 hours.

### Vacation

Enables to define up to 20 holiday periods and the partitions that will be set automatically during the holiday.

## Event Log

### Event Log

Allows the viewing of significant system events including date and time.

**Notes**

- The events memory cannot be erased.
- To skip 10 events at a time backward or forward, use the consecutively

## Maintenance

### Maintenance

### Walk Test

Enables to easily test and evaluate the operation of selected zones in your system. Walk test is set for up to 60 minutes. During the last 5 minutes of walk test mode, the keypad used to perform the walk test will indicate that the walk test is about to end.

*Full walk test* — The test will display the detected zones and type of detection.

*Quick walk test* —The test will display the undetected zones

### Siren Test

Activates the alarm sound from each BUS sounder, from the Bell terminals on the main board and activates utility outputs defined as Bell Trigger (③② ❷❷).

### Strobe Test

Activates all strobes in connected BUS sounders and activates utility output defined as Follow Strobe (③② ❷❸).

## Zone Resistance

Tests the resistance and voltage level of the wired zones in the system. Use the key to toggle between resistance and voltage of each detector

## Diagnostics

Activates the relevant tests for:

***Main Unit***: Tests the standby battery level of the main board and the system version.

***Bus Zones***: Performs a diagnostic test to the Bus zones in the system and displays the relevant information for each detector.

***Zone Expander***: Performs a diagnostic communication test on installed zone expanders and tests its version.

***Power supply***: Performs a diagnostic communication test on installed power supplied expanders and displays the relevant information for each power supply.

***Siren***: Performs a diagnostic communication test on installed bus sirens and displays the information regarding each siren (depending on the siren type).

***GSM***: Performs a diagnostic test for the following parameters of the plug in GSM module:

- Signal (RSSI): Displays the signal level measured by the GSM module. (0=No signal, 5= Very high signal)
- Version: Displays information regarding the GSM module version
- IMEI: View the IMEI number of the GSM module. This number is used for identification of the LightSYS at the RISCO IP receiver when using GSM or GPRS communication.

***IP***: Performs a diagnostic test for the following parameters of the plug in IP module:

- IP Address: View the IP address of the LightSYS
- Version: View the IP module software version
- MAC Address: View the MAC address of the IP card. This number is used for identification of the LightSYS at the RISCO IP receiver when using IP communication

***Wireless***: Displays the wireless module software version and enables to activate the following tests for recognized wireless devices in the system (keyfobs, wireless zones, wireless keypads).

- *Communication Test*— Displays the results of the last measurement performed after the last transmission (last detection or last supervision signal) of the selected device. To receive updated signal strength, activate the detector prior to performing the communication test. For successful communication, the strength of the signal should be higher than the noise

threshold level as measured during calibration of the main unit.

❖ *Battery Test* — Displays the results of the last battery test of the selected device performed after the last transmission. OK message is displayed for a successful test. For an updated value activate the device

***Keypads***: Displays the RP432 keypads software version number and momentarily tests the keypad indicators.

***Voice:*** Displays the voice module software version number and creation date.

***LRT***: Displays the Log Range Radio module software version and its active protocol

## Macro

### Macro

LightSYS enables the installer or Grand Master record a series of commands and assign them to a macro. For more information refer to *LightSYS User Manual*.

## Stand Alone Keyfobs

### Stand Alone Keyfob

LightSYS enables the installer or Grand Master to assign up to 200 keyfobs that can be used for gate control. For addition information refer to *LightSYS User Manual*.

# Appendix A Technical Specifications

| Main | Technical Information |
|---|---|
| **Input Power:** | AC/DC Adaptor 100-240V 50/60Hz 14.4V—1.5A , 3A |
| **Current Consumption:** | 60 mA, typical / 70 mA, maximum |
| **Rechargeable Standby Battery:** | 1.5A PS: 12 Volts up to 7 Amp-Hours (AH), typical<br>3A PS: 12 Volts up to 17 Amp-Hours (AH), typical |
| **Power Outputs:** | **Auxiliary Power:**<br>**1.5A PS**: Total current 800mA; Maximum Aux = 500mA; Maximum BUS (AUX RED) = 800mA<br>**3A PS**: Total current 1500mA; Maximum Aux = 500mA; Maximum BUS (AUX RED) = 1000mA<br>**Bell/LS (External):** 12 Volts DC @ 500 mA, maximum |
| **Programmable outputs:** | **UO1:** Dry contact relay (24V, 1 Amps)<br>**UO2-UO4:** 100 mA, opto relay |
| **Main Box Dimensions** | RP432B Polycarbonate (1.5A PS): 290 x 254 x 97 mm<br>RP432BM Metal, small (1.5A PS): 264 x 299 x 80 mm<br>RP432BM1 Metal, large (3A or 1.5A PS): 420 x 379 x 95 mm |
| **Operating temperature** | -10°C to 55°C (14°F to 131°F) |
| **Weight** | 1.9 Kg (including battery) |
| **Storage temperature** | -20°C to 60°C (-4°F to 140°F) |
| Keypads | |
| **LCD Keypad (RP432KP, RP432KPP)** | |
| **Voltage** | 13.8V +/-10%, |
| **Current Consumption** | LCD (RP432KP): 48 mA typical/52 mA max<br>Prox LCD ( RP432KPP): 62 mA typical/130 mA max |
| **Main panel connection** | 4-wire BUS, up to 300 m (1000 ft) from Main Panel |
| **Dimensions** | 153 x 84 x 28 mm (6.02 x 3.3 x 1.1 inch) |
| **Operating temperature** | -10°C to 55°C (14°F to 131°F) |
| **Storage temperature** | -20°C to 60°C (-4°F to 140°F) |
| **Prox. RF frequency** | 13.56MHz |
| **Touchscreen Keypad (RP128KP01, RP128KPP1)** | |
| **Voltage** | 13.8V +/-10%, |
| **Current Consumption** | RP128KP01: 30 mA typical / 180 mA Max<br>RP128KPP1(with prox): 30 mA typical / 280 mA max |
| **Main Panel Connection** | 4-wire BUS, up to 300 m (1000 ft) from Main Panel |

| | |
|---|---|
| **Dimensions** | 210 mm x 152 mm x 20 mm (8.2" x 5.9" x 0.7") |
| **Operating temperature** | -10°C to 55°C (14°F to 131°F) |
| **Storage temperature** | -20°C to 60°C (-4°F to 140°F) |
| **Prox. RF Frequency** | 13.56MHz |
| **LCD Keypad (RP128KP, RP128KPP)** | |
| **Voltage** | 13.8V +/-10%, |
| **Current** | RP128KP: 100 mA maximum<br>RP128KPP (with prox) 250 mA maximum |
| **Main Panel Connection** | 4-wire BUS, up to 300 m (1000 ft) from Main Panel |
| **Dimensions** | 16.2 cm x 12.2 cm x 3 cm (6.37" x 4.8" x 1.18") |
| Zone Expander (RP432EZ8) | |
| **Voltage** | 13.8VDC +/-10%; |
| **Current** | 25 mA, typical / 30 mA, maximum |
| **Main Panel Connection** | 4-wire BUS, up to 300 m (1000 ft) from Main Panel |
| **Dimensions** | 10.5 cm x 6.6 cm x 1.8 cm |
| Utility Output Expanders | |
| **4 Relay Output(RP296EO4)** | |
| **Voltage** | 13.8VDC +/-10%; |
| **Current** | 25 mA, typical / 160 mA, maximum |
| **Contacts** | 4 Form C (SPDT) Relays.; 5 A / 24V DC |
| **Main Panel Connection** | 4-wire BUS, up to 300 m (1000 ft) from Main Panel |
| **Dimensions** | 4.13" x 2.6" x 0.86" (10.5 cm x 6.6 cm x 2.2 cm) |
| **8 Transistor Output (RP296EO8)** | |
| **Voltage** | 13.8VDC +/-10%; |
| **Current** | 25 mA, typical / 160 mA, maximum |
| **Contacts** | Open Collector, Active Pull-Down, 70 mA maximum |
| **Main Panel Connection** | 4-wire BUS, up to 300 m (1000 ft) from Main Panel |
| **Dimensions** | 4.13" x 2.6" x 0.7" (10.5 cm x 6.6 cm x 1.8 cm) |
| **X-10 Transmitter Module** | |
| **Voltage** | 13.8VDC +/-10%; |
| **Current** | 30 mA, maximum |
| **Main Panel Connection** | 4-wire BUS, up to 300 m (1000 ft) from Main Panel |
| **Dimensions** | 10.5 cm x 6.6 cm x 1.8 cm |
| Wireless Expander (RP432EW) | |
| **Voltage** | e |

| | |
|---|---|
| **Current** | Typical: 40 mA; 65mA maximum |
| **Frequency** | RW432EW8 – 868.65 MHz; RW432EW4 – 433.92 MHz |
| **RF immunity:** | According to EN50130-4 |
| **Range (L.O.S)** | 300 meters |
| **Relay outputs** | 12VDC @ 1A max Dry Contact Relays |
| **Operating temperature:** | -10°C to 55°C (14°F to 131°F) |
| **Storage temperature:** | -20°C to 60°C (-4°F to 140°F) |
| **Main Panel Connection** | 4-wire BUS, up to 300 m (1000 ft) from Main Panel |
| **Dimensions** | 125.5 X 78X 25.5 mm (4.94 X 3.07 X 1 inch) |
| Proximity Key Reader (RP128PKR) | |
| **Voltage** | 13.8VDC +/-10%; |
| **Current** | 70 mA, typical / 180 mA max |
| **Main Panel Connection** | 4-wire BUS, up to 300 m (1000 ft) from Main Panel |
| **Dimensions** | 40 mm x 43.6 mm x 22 mm (1.57" x 1.7" x 0.86") |
| Voice Module (RP432EV) | |
| **Voltage** | 13.8VDC +/-10%; |
| **Current** | 30 mA typical / 70 mA maximum |
| **Operating temperature** | 0-70°C |
| **Main Panel Connection** | 4-wire BUS, up to 300 m (1000 ft) from Main Panel |
| Sirens | |
| *** ProSound ( RS200WA, RS200WAP)** | |
| **Input DC Power** | Regulated 13.5-14.2V, 200 mA maximum |
| **Standby Current Consumption** | 54 mA + charge current |
| **Battery charging current** | 140 mA maximum |
| **Operating Current Consumption** | 1.6A ((Sounder + Strobe)) |
| **Speaker Sound level** | 106 dB @ 3 meters |
| **Main Panel Connection** | 4-wire BUS, up to 300 m (1000 ft) from Main Panel |
| **Dimensions** | 30.5 cm X 21.8 cm X 11.6 cm |
| * For full technical information refer to the manual of the siren | |
| *** Lumin8 ( RS200WA, RS200WAP)** | |
| **Input DC Power** | Regulated 13.0- 14.2V |
| **Current Consumption** | Single piezo: 350mA (Regulated)<br>Twin piezo: 450mA (Regulated) |

| | |
|---|---|
| **Battery charging current** | 15 mA maximum |
| **Speaker Sound level** | Single piezo: 111dbA<br>Twin piezo: 114dbA) |
| **Main Panel Connection** | 4-wire BUS, up to 300 m (1000 ft) from Main Panel |
| * For full technical information refer to the manual of the siren | |
| Singe Bus Zone Expander (RP128EZ01) | |
| **Voltage** | 13.8VDC +/-10% |
| **Current** | 20mA |
| **Main Panel Connection** | 4-wire BUS, up to 300 m (1000 ft) from Main Panel |
| Plug In GSM (RP432GSM) | |
| **Voltage** | 13.8VDC +/-10% |
| **Current** | During Communication - 300mA<br>During Standby - 30mA |
| **Dimensions** | 80 mm x 50 mm x 25 mm |
| Plug In IP (RW132IP) | |
| **Voltage** | 13.8VDC +/-10%; |
| **Current** | 90mA maximum |
| **Dimensions** | 70 mm x 60 mm |
| Plug In Modem 2400 (RP432MD24) | |
| **Voltage** | 13.8VDC +/-10%; |
| **Current** | 20 mA, typical / 60 mA, maximum |
| **Dimensions** | 70 mm x 25 mm |
| BUS Expander (RP432EZB) | |
| **Voltage** | 13.8VDC +/-10%; |
| **Current** | 20 mA, typical |
| **Main Panel Connection** | 4-wire BUS, up to 300 m (1000 ft) from Main Panel |
| **Dimensions** | 10.5 cm x 6.6 cm x 1.8 cm |
| LRT (Long Range Transmitter) | |
| **Voltage** | 13.8VDC +/-10%; |
| **Current** | 10 mA, standby / 1A maximum |
| **Dimensions** | 227 mm x 173 mm x 124 mm |

# Appendix B LightSYS Accessories

| Keypads | Description |
|---|---|
| RP432KP | LightSYS LCD keypad, slim |
| RP432KPP | LightSYS LCD keypad with proximity, slim (13.56 MHz) |
| RP128KP02 | Touch screen keypad, white |
| RP128KPP2 | Touch screen keypad with proximity (13.56 MHz) |
| RP128KCL | LCD keypad |
| RP128KCLP | LCD keypad with proximity (125 KHz) |
| RP200KT | Proximity tags (13.56 MHz) |
| RP128KT | Proximity tags (125 KHz) |
| **Zone Expanders** | **Description** |
| RP432EZ8 | 8 Zone Expansion Module |
| RP128EZB000B | Bus Zone Expander |
| RP128EZ01 | Wired Single BUS Zone Expander |
| **Wireless Zone Expanders** | **Description** |
| RP432EW8 | Wireless Receiver , 868 MHz |
| RP432EW4 | Wireless Receiver , 433 MHz |

| Wireless Transmitters 868MHz | Wireless Transmitters 433MHz | Description |
|---|---|---|
| RWT920868 | RWT920433 | Wireless PIR detector |
| RWT92P868 | RWT92P433 | Wireless PIR detector with pet immunity |
| RWT33S868 | RWT33S433 | Wireless smoke detector |
| RWT72C868 | RWT72C433 | Wireless door contact |
| RWT72M868 | RWT72M433 | Wireless door contact + magnet |
| RWT72P868 | - | Wireless transmitter for shutter pulse |
| RWT72X868 | - | Wireless 2 channel Shutter/Universal transmitter |
| RP128T4RC, RW132KF1000A | RP296T4RC, RW132KF1000H | 4-button rolling code transmitter |
| RWT540868 | RWT540000EUA | 4-button 3 channel key fob transmitter |
| RWT50P868 | RWT50EUV2 | Wireless pendant panic button |
| RWT51P8 | RWT51P4 | Wristband panic transmitter, |

| | | |
|---|---|---|
| RWT52P868 | RWT52P433 | Wireless 2-button panic |
| RWT6SW868 | RWT6SW433 | Wireless shock detector |
| RWT6FW868 | RWT6FW433 | Wireless Flood Detector |
| RWT6C08 | RWT6C04 | Wireless CO Detector |
| RWT6G0868 | RWT6G0433 | Wireless Glass Break |
| RWT6GS8 | RWT6GS4 | Wireless GAS Detector |
| RWT312PR8 | RWT312PR4 | Wireless WatcHOUT |
| RWSALKWL0100A | RWSALKWL0100H | Wireless Keypad |

| **Power Supply Expanders** | **Description** |
|---|---|
| RP432PS0000A | LightSYS Power Supply, EU |
| RP432PS00USA | LightSYS Power Supply, USA |
| RP128EPS | 3A Switched Power Supply Expansion Module module |
| RP128EPSPUKA | 3A Switched Power Supply Expansion Module in tamper box (Medium UK ) |
| RP128PSPSEUA | 3A Switched Power Supply inside large metal box + Tamper + transformer |
| RP128PSPSUSA | 3A Switched Power Supply inside large metal box + Tamper (No transformer) |

| **Programmable Output Devices** | **Description** |
|---|---|
| RP296E04 | 4-Relay Output Expansion Module |
| RP296E08 | 8 Open-Collector Output Expansion Module |

| **Voice Unit** | **Description** |
|---|---|
| RP432EV | LightSYS Voice module |
| RP128EVL000A | Listen and speak-in module |

| **Proximity Key Reader** | **Description** |
|---|---|
| RP128PKR3 | Proximity Key Reader Kit 13.56MHz |

| **X-10 Module** | **Description** |
|---|---|
| RP296EXT | X-10 Transmitter Module |

| **IP Module** | **Description** |
|---|---|
| RW132IP | Plug-in TCP/IP Module |

| **GSM/GPRS Module** | **Description** |
|---|---|
| RP432GSM | Plug-in GSM/GPRS + Antenna |

| **Fast PSTN Modem 2400 BPS** | **Description** |
|---|---|
| RP432MD24 | Plug-in LightSys Fast Modem |

| IP/AGM Receiver | Description |
|---|---|
| RP128IP0000A | AGM/IP Receiver Software |
| **External Sirens** | **Description** |
| RS200WA | ProSound |
| RS200WAP | ProSound with Proximity |
| | ProSound External Lamp |
| RS4012 | Lumin8, 2 Piezo+Lamp |
| RS4022 | Lumin8 Delta, 2 Piezo+Lamp |
| RS400LW | Lumin8 External Lamp |

| Uploading/Down loading | Description |
|---|---|
| RP128EE | Program Transfer Module |
| RW132EUSB | Adaptor from panel to PC USB |
| RP132CB | RS232 PC to Panel Cable |
| **Bus Detectors** | **Description** |
| RK315DT | WatchOUT DT + swivel |
| RK325DT | WatchIN DT + swivel |
| RK312PR | WatchOUT PIR + swivel |
| RK200DTG3 | Industrial LuNAR DT AM Grade 3 |
| RK815DTB | iWISE DT AM Grade 3 , 15m |
| RK825DTB000A | iWISE DT AM Grade 3 , 25m |
| RK800Q0B000A | iWISE Quad 15m (50 ft) AM Grade 3 |
| RK815DTB200A | iWISE DT AM Grade 2 , 15m |
| RK825DTB200A | iWISE DT AM Grade 2 , 25m |
| RK800Q0B200A | iWISE Quad 15m AM Grade 2 |
| **Boxes** | **Description** |
| RP432B | LightSYS Polycarbonate housing |
| RP128B5 | Plastic accessories box + tamper |
| **Main panel** | **Description** |
| RP432M | LightSYS Main Board |

# Appendix C Wiring

The proper use of wire and cable is necessary for the successful installation and operation of the LightSYS system. It is important to select wire of the correct thickness to minimize power loss and ensure reliable system operation. Take into account both the installation's current requirements and the wiring distances involved. The following tables provide useful information to help make your installation trouble-free.

| AWG Gauge Size | Wire Diameter | | Resistance: Meters | | Resistance: Feet | |
|---|---|---|---|---|---|---|
| | Millimeters | Inches | Ω Per Meter | Ω Per 100 Meters | Ω Per Foot | Ω Per 1000 Feet |
| 24 | 0.50 | 0.020 | 0.085 | 8.5 | 0.026 | 26.0 |
| 22 | 0.64 | 0.025 | 0.052 | 5.2 | 0.016 | 16.0 |
| 20 | 0.80 | 0.031 | 0.032 | 3.2 | 0.010 | 10.0 |
| 19 | 0.90 | 0.035 | 0.026 | 2.6 | 0.008 | 8.0 |
| 18 | 1.00 | 0.040 | 0.020 | 2.0 | 0.006 | 6.0 |
| 16 | 1.27 | 0.050 | 0.013 | 1.3 | 0.004 | 4.0 |
| 14 | 1.63 | 0.064 | 0.008 | 0.82 | 0.0025 | 2.5 |

*Table A-1: Wire Facts*

| One-Way Wire Distance Between LightSYS and Plug-In Transformer | | AWG (American Wire Gauge) For best results use the indicated wire size or larger (numerically lower) size | | | | |
|---|---|---|---|---|---|---|
| In Meters | In Feet | 22 | 20 | 18 | 16 | 14 |
| Up to 5 | Up to 15 | ✓ | | | | |
| 5 - 8 | 15 - 25 | | ✓ | | | |
| 8 - 12 | 25 - 40 | | | ✓ | | |
| 12 - 20 | 40 - 60 | | | | ✓ | |
| 20 - 30 | 60 - 100 | | | | | ✓ |

*Table A-2: Wiring Between the LightSYS Main Panel and the Plug-In Transformer*

| Wire Gauge | | Max Combined Length of ALL Expansion Bus Wiring | |
|---|---|---|---|
| 24 AWG | 7/02mm | 150 meters | 492 feet |
| 22 AWG | 16/02mm | 200 meters | 656 feet |
| 20 AWG | 24/02mm | 333 meters | 1092 feet |
| 19 AWG | 28/02mm | 400 meters | 1312 feet |

*Table A-3: Wire Gauge*

**Notes:**

For maximum system stability, it is best NOT to exceed a total of 300 meters (1000 feet) of wire when wiring the Expansion bus.
For a distance of more than 300 meters, refer to RISCO Group technical support service for detailed information.

| Total Auxiliary Power (Max Current Draw per Branch) | Desired Wire Gauge in Particular Branch | | | | | | | | | |
|---|---|---|---|---|---|---|---|---|---|---|
| | 32/02 mm 18 AWG | | 28/02 mm 19 AWG | | 24/02 mm 20 AWG | | 16/02 mm 22 AWG | | 7/02 mm 24 AWG | |
| | Max Run | | Max Run | | Max Run | | Max Run | | Max Run | |
| | Meters | Feet | Meters | Feet | Meters | Feet | Meters | Feet | Meters | Feet |
| **20mA** | 1195 | 3920 | 945 | 3100 | 750 | 2460 | 472 | 1550 | 296 | 970 |
| **30mA** | 793 | 2600 | 628 | 2060 | 500 | 1640 | 314 | 1030 | 197 | 646 |
| **40mA** | 597 | 1960 | 472 | 1550 | 375 | 1230 | 236 | 775 | 148 | 485 |
| **50mA** | 478 | 1568 | 378 | 1240 | 300 | 984 | 189 | 620 | 118 | 388 |
| **60mA** | 296 | 1300 | 314 | 1030 | 250 | 820 | 157 | 515 | 98 | 323 |
| **70mA** | 341 | 1120 | 270 | 886 | 214 | 703 | 135 | 443 | 84 | 277 |
| **80mA** | 299 | 980 | 237 | 775 | 187 | 615 | 118 | 388 | 74 | 243 |
| **90mA** | 264 | 867 | 209 | 687 | 166 | 547 | 105 | 343 | 66 | 215 |
| **100mA** | 239 | 784 | 189 | 620 | 123 | 492 | 94 | 310 | 59 | 194 |

*Table A-4: Total Auxiliary Power*

**Note:**

The wire lengths indicated represent the one-way distance between the source of power and the last detector in the branch.

| Max External Sounder Current (Max current draw per branch) | Desired Wire Gauge in Particular Branch | | | | | | | |
|---|---|---|---|---|---|---|---|---|
| | 32/02 mm | | 28/02 mm | | 24/02 mm | | 16/02 mm | |
| | Max Run | | Max Run | | Max Run | | Max Run | |
| | Meters | Feet | Meters | Feet | Meters | Feet | Meters | Feet |
| 100mA | 238 | 780 | 191 | 625 | 151 | 495 | 94 | 310 |
| 200mA | 229 | 390 | 95 | 313 | 76 | 248 | 47 | 155 |
| 300mA | 79 | 260 | 63 | 208 | 50 | 165 | 31 | 103 |
| 400mA | 59 | 195 | 48 | 157 | 38 | 124 | 24 | 78 |
| 500mA | 48 | 156 | 38 | 125 | 30 | 99 | 19 | 62 |
| 650mA | 37 | 120 | 29 | 96 | 23 | 76 | 15 | 48 |

*Table A-5: Maximum External Sounder Current*

**Note:**

The wire lengths indicated represent the one-way distance between the LightSYS and the external sounder in the branch.

# Appendix D Library Voice Messages

| | |
|---|---|
| 001 | (Custom) |
| 002 | (Custom) |
| 003 | (Custom) |
| 004 | (Custom) |
| 005 | (Custom) |
| A | |
| 006 | A |
| 007 | Above |
| 008 | Air conditioner |
| 009 | An |
| 010 | And |
| 011 | Apartment |
| 012 | Area |
| 013 | At |
| 014 | Attic |
| B | |
| 015 | Baby's room |
| 016 | Back |
| 017 | Balcony |
| 018 | Basement |
| 019 | Bathroom |
| 020 | Bedroom |
| 021 | Before |
| 022 | Behind |
| 023 | Bottom |
| 024 | Boy's room |
| 025 | By |
| C | |
| 026 | Camera |
| 027 | Ceiling |
| 028 | Cellar |
| 029 | Central |
| 030 | Children |
| 031 | Cleaner |
| 032 | CO |
| 033 | Computer room |
| 034 | Contact |
| 035 | Control |
| 036 | Corner |
| 037 | Curtain |
| D | |
| 038 | Desk |
| 039 | Detector |
| 040 | Device |
| 041 | Dining |
| 042 | Door |
| 043 | Down |
| 044 | Downstairs |
| 045 | Dressing |
| E | |
| 046 | East |
| 047 | Elevator |
| 048 | Emergency |
| 049 | Entrance |
| 050 | Entry |
| 051 | Executive |
| 052 | Exit |
| 053 | External |
| F | |
| 054 | Family |
| 055 | Fence |
| 056 | Fire |
| 057 | First |
| 058 | Flood |
| 059 | Floor |
| 060 | For |
| 061 | Foyer |
| 062 | Front |
| G | |
| 063 | Game |
| 064 | Garage |
| 065 | Garden |
| 066 | Gas |
| 067 | Gate |
| 068 | Girl's room |
| 069 | Glass |
| 070 | Guest |
| H | |
| 071 | Hallway |
| 072 | High |
| I | |
| 073 | In |
| 074 | Indoor |
| 075 | Inside |
| 076 | Internal |
| 077 | Is |
| K | |
| 078 | Keyfob |
| 079 | Kitchen |
| L | |
| 080 | Landing |
| 081 | Left |
| 082 | Library |
| 083 | Light |
| 084 | Living |
| 085 | Lobby |
| 086 | Low |
| M | |
| 087 | Macro |
| 088 | Magnet |
| 089 | Main |
| 090 | Master |
| 091 | Middle |
| 092 | Motion |
| N | |
| 093 | Near |
| 094 | New |
| 095 | North |
| 096 | Nursery |
| O | |
| 097 | Of |
| 098 | Office |
| 099 | On |
| 100 | Outdoor |
| 101 | Output |
| 102 | Outside |
| P | |
| 103 | Panic |
| 104 | Partition |
| 105 | Passage |
| 106 | Patio |
| 107 | Perimeter |
| 108 | Pool |
| R | |
| 109 | Rear |
| 110 | Reception |
| 111 | Refrigerator |
| 112 | Relay |
| 113 | Right |
| 114 | Roof |
| 115 | Room |
| S | |
| 116 | Safe |
| 117 | Safety |
| 118 | Second |
| 119 | Sensor |
| 120 | Shock |
| 121 | Shop |
| 122 | Shutter |
| 123 | Side |
| 124 | Siren |
| 125 | Site |
| 126 | Smoke |
| 127 | South |
| 128 | Sprinkler |
| 129 | Stairs |
| 130 | Store |
| 131 | Student room |
| 132 | Study |
| T | |
| 133 | Technical |
| 134 | Temperature |
| 135 | Third |
| 136 | To |
| 137 | Top |
| 138 | TV |
| U | |
| 139 | Under |
| 140 | Up |
| 141 | Upstairs |
| V | |
| 142 | Video camera |
| W | |
| 143 | Wall |
| 144 | Warehouse |
| 145 | Washroom |
| 146 | West |
| 147 | Window |
| Y | |
| 148 | Yard |
| Z | |
| 149 | Zone |
| Numbers | |
| 150 | 0 |
| 151 | 1 |
| 152 | 2 |
| 153 | 3 |
| 154 | 4 |
| 155 | 5 |
| 156 | 6 |
| 157 | 7 |
| 158 | 8 |
| 159 | 9 |

# Appendix E Report Codes

## Report Codes

| Parameter | Contact ID | SIA | Report Category |
|---|---|---|---|
| **Alarms** | | | |
| Panic alarm | 120 | PA | Urgent |
| Panic alarm restore | 120 | PH | Urgent |
| Fire alarm | 115 | FA | Urgent |
| Fire alarm restore | 115 | FH | Urgent |
| Medical alarm | 100 | MA | Urgent |
| Medical alarm restore | 100 | MH | Urgent |
| Duress alarm | 121 | HA | Urgent |
| Duress alarm restore | 121 | HH | Urgent |
| Box tamper | 137 | TA | Urgent |
| Box tamper restore | 137 | TR | Urgent |
| Confirmed alarm | 139 | BV | Urgent |
| Confirmed alarm restore | 139 | | Urgent |
| Recent Close | 459 | | Non- urgent |
| **Main Troubles** | | | |
| Low battery | 302 | YT | Non- urgent |
| Low battery restore | 302 | YR | Non- urgent |
| AC loss | 301 | AT | Non- urgent |
| AC restore | 301 | AR | Non- urgent |
| Clock not set | 626 | | Non- urgent |
| Clock set | 625 | | Non- urgent |
| False code | 421 | JA | Non- urgent |
| False code restore | 421 | | Non- urgent |
| Main phone trouble | 351 | LT | Non- urgent |
| Main phone trouble restore | 351 | LR | Non- urgent |
| RF Jamming | 344 | XQ | Non- urgent |
| RF Jamming restore | 344 | XH | Non- urgent |
| GSM trouble | 330 | IA | Non- urgent |
| GSM trouble restore | 330 | IR | Non- urgent |
| GSM Pre-Alarm | | | Non- urgent |
| IP Network trouble | | | Non- urgent |

| Report Codes<br>Parameter | Contact ID | SIA | Report Category |
|---|---|---|---|
| IP Network trouble restore | | | Non- urgent |
| **Arm/Disarm** | | | |
| User Arm | 401 | CL | Arm/Disarm |
| User Disarm | 401 | OP | Arm/Disarm |
| Stay arm | 441 | CG | Arm/Disarm |
| Disarm after alarm | 458 | OR | Arm/Disarm |
| Keyswitch Arm | 409 | CS | Arm/Disarm |
| Keyswitch Disarm | 409 | OS | Arm/Disarm |
| Auto Arm | 403 | CA | Arm/Disarm |
| Auto Disarm | 403 | OA | Arm/Disarm |
| Remote Arm | 407 | CL | Arm/Disarm |
| Remote Disarm | 407 | OP | Arm/Disarm |
| Forced Arm | 574 | CF | Arm/Disarm |
| Quick Arm | 408 | CL | Arm/Disarm |
| No Arm | 654 | CD | Arm/Disarm |
| Auto Arm fail | 455 | CI | Arm/Disarm |
| **Detectors(Zones)** | | | |
| Burglary alarm | 130 | BA | Urgent |
| Burglary alarm restore | 130 | BH | Urgent |
| Fire alarm | 110 | FA | Urgent |
| Fire alarm restore | 110 | FH | Urgent |
| Foil alarm | 155 | BA | Urgent |
| Foil alarm restore | 155 | BH | Urgent |
| Panic alarm | 120 | PA | Urgent |
| Panic alarm restore | 120 | PH | Urgent |
| Medical alarm | 100 | MA | Urgent |
| Medical alarm restore | 100 | MH | Urgent |
| 24 Hour alarm | 133 | BA | Urgent |
| 24 Hour alarm restore | 133 | BH | Urgent |
| Entry/Exit | 134 | BA | Urgent |
| Entry/Exit restore | 134 | BH | Urgent |
| Water (Flood) alarm | 154 | WA | Urgent |

| Report Codes<br>Parameter | Contact ID | SIA | Report Category |
|---|---|---|---|
| Water (Flood) alarm restore | 154 | WH | Urgent |
| Gas alarm | 151 | GA | Urgent |
| Gas alarm restore | 151 | GH | Urgent |
| Carbon Monoxide alarm | 162 | GA | Urgent |
| Carbon Monoxide alarm restore | 162 | GH | Urgent |
| Environmental alarm | 150 | UA | Urgent |
| Environmental alarm restore | 150 | UH | Urgent |
| Low Temperature (Freeze alarm) | 159 | ZA | Urgent |
| Low Temperature restore | 159 | ZH | Urgent |
| High Temperature | 158 | KA | Urgent |
| High Temperature restore | 158 | KH | Urgent |
| Zone trouble | 380 | UT | Urgent |
| Zone trouble restore | 380 | UJ | Urgent |
| Burglary trouble | 380 | BT | Urgent |
| Burglary trouble restore | 380 | BJ | Urgent |
| Zone bypass | 570 | UB | Urgent |
| Zone bypass restore | 570 | UU | Urgent |
| Burglary bypass | 573 | BB | Urgent |
| Burglary bypass restore | 573 | BU | Urgent |
| Zone supervision loss | 381 | UT | Urgent |
| Zone supervision restore | 381 | UJ | Urgent |
| Tamper | 144 | TA | Urgent |
| Tamper restore | 144 | TR | Urgent |
| Zone lost | 381 | UT | Urgent |
| Zone lost restore | 381 | UJ | Urgent |
| Low battery | 384 | XT | Non- urgent |
| Low battery restore | 384 | XR | Non- urgent |
| Soak fail | 380 | UT | Urgent |
| Soak fail restore | 380 | UJ | Urgent |
| Zone Alarm | 134 | BA | Urgent |
| Zone Alarm restore | 134 | BH | Urgent |
| Zone confirm alarm | 139 | BV | Urgent |

| Report Codes | | | |
|---|---|---|---|
| Parameter | Contact ID | SIA | Report Category |
| Zone confirm alarm restore | 139 | | Urgent |
| No activity | 393 | NC | Urgent |
| No activity restore | 393 | NS | Urgent |
| **Wireless Keypad** | | | |
| Tamper | 145 | TA | Urgent |
| Tamper restore | 145 | TR | Urgent |
| Low battery | 384 | XT | Non- urgent |
| Low battery restore | 384 | XR | Non- urgent |
| Keypad lost | 355 | BZ | Urgent |
| Keypad lost restore | 355 | | Urgent |
| **Wireless Keyfob** | | | |
| Arm | 409 | CS | Arm/Disarm |
| Disarm | 409 | OS | Arm/Disarm |
| Low battery | 384 | XT | Non- urgent |
| Low battery restore | 384 | XR | Non- urgent |
| **Wireless Siren** | | | |
| Tamper | 145 | TA | Urgent |
| Tamper restore | 145 | TR | Urgent |
| Low battery | 384 | XT | Non- urgent |
| Low battery restore | 384 | XR | Non- urgent |
| Siren lost | 355 | BZ | Urgent |
| Siren lost restore | 355 | | Urgent |
| **Wireless I/O Expander** | | | |
| Low battery | 384 | XT | Non- urgent |
| Low battery restore | 384 | XR | Non- urgent |
| I/O Expander lost | 355 | BZ | Urgent |
| I/O Expander lost restore | 355 | | Urgent |
| Tamper | 145 | TA | Urgent |
| Tamper restore | 145 | TR | Urgent |
| AC trouble | 301 | AT | Non- urgent |
| AC trouble restore | 301 | AR | Non- urgent |
| RF Jamming | 380 | XQ | Urgent |

| Report Codes | | | |
|---|---|---|---|
| Parameter | Contact ID | SIA | Report Category |
| RF Jamming restore | 380 | XH | Urgent |
| **Miscellaneous** | | | |
| Enter programming (local) | 627 | LB | Arm/Disarm |
| Exit programming (Local) | 628 | LS (LX ) | Arm/Disarm |
| Enter programming (Remote) | 627 | RB | Arm/Disarm |
| Exit programming (Remote) | 628 | RS | Arm/Disarm |
| MS periodic test | 602 | RP | Non- urgent |
| MS keep alive (polling) | 999 | ZZ | Urgent |
| Call back | 411 | RB | Non- urgent |
| System reset | 305 | RR | Urgent |
| Listen in begin | 606 | LF | Urgent |
| Cancel Report | 406 | OC | Urgent |
| Walk Test | 607 | BC | Non- urgent |
| Walk Test restore | 607 | | Non- urgent |
| Exit Error | 374 | | Non- urgent |

# Appendix F Installer Event Log Messages

| Event Message | Description |
|---|---|
| AC Low PS=y | Loss of AC power from power supply ID=y |
| AC RST PS=y | AC power restore on power supply ID=y |
| Activate UO=xx | UO XX activation |
| Actv UO=xx KF=zz | UO XX is activated from remote control ZZ |
| Alarm Z=xx | Alarm in zone no. XX |
| Alrm Cancel P=y | Alarm is cancelled in partition ID=Y |
| AMPRX DTCT Z=xx | Anti mask proximity detection on Bus zone XX |
| AMPRX RSTR Z=xx | Anti mask proximity detection restore on Bus zone XX |
| ARM A:P=y C=zz | Group A on partition Y is armed by user ZZ |
| ARM A:P=y KF=zz | Group A on partition Y is set by wireless keyfob ZZ |
| ARM B:P=y C=zz | Group B on partition Y is armed by user ZZ |
| ARM B:P=y KF=zz | Group B on partition Y is set by wireless keyfob ZZ |
| ARM C:P=y C=zz | Group C on partition Y is armed by user ZZ |
| ARM C:P=y KF=zz | Group C on partition Y is set by wireless keyfob ZZ |
| ARM D:P=y C=zz | Group D on partition Y is armed by user ZZ |
| ARM D:P=y KF=zz | Group D on partition Y is set by wireless keyfob ZZ |
| ARM FAIL P=y | Fail to Arm Partition X by Guard due to not ready zones |
| ARM:P=y C=zz | Partition Y armed by user ZZ |
| ARM:P=y KF=zz | Partition Y armed by wireless keyfob ZZ |
| Aut tst fail | Failure of zone self-test |
| Auto test OK | Automatic zone self-test OK |
| Aux RS PS=y | Restore of Aux power on power supply ID=Y |
| Aux RS ZE=y | Restore of S. Aux power on zone expander Y |
| Aux TRBL RS S=y | Auxiliary trouble restore on the siren ID=Y |
| Aux TRBL SIR.=y | Auxiliary trouble on the siren ID=Y |
| Bat Load RS S=y | Battery load trouble restore from siren ID=Y |
| Bat Load SIR.=y | Battery load trouble from siren ID=Y |
| Bat Rst PS=y | Low battery trouble restore from power supply ID=Y |
| BELL RS PS=y | Bell trouble restore in power supply ID=Y |
| Bell tamper | Bell tamper alarm |
| Bell tmp rs | Bell tamper alarm restore |

| Event Message | Description |
|---|---|
| Box tamper | Box tamper alarm from main unit |
| Box tmp rs | Box tamper alarm restore |
| Bypass Box+Bell | Box + Bell tamper is bypassed |
| Byp Trbl C=xx | System troubles were bypassed by user XX |
| Bypass Zn=xx | Zone no. XX is bypassed |
| Charge Curr S=y | Battery charging trouble in siren ID=Y |
| Chng code=xx | Changing user code XX |
| Change FM=yy | Changing Follow-Me number YY |
| Charge Current RS S=y | Battery charging trouble restore in siren ID=Y |
| Clk not set | Time is not set |
| Clk set C=xx | Time defined by user no. XX |
| CO Alarm Z=xx | CO alert from zone XX defined as a CO detector |
| CO Rst. Z=xx | CO alert restored from zone XX defined as a CO detector |
| Comm OK IPC | Communication OK between the LightSYS and IP card |
| Comm OK KP=y | Bus communication restore with keypad ID=Y |
| Comm OK KR=y | Bus communication OK with Proximity Key Reader Y |
| Comm OK VOICE | Bus communication OK with Advanced Voice module |
| Comm OK WME=y | Bus communication OK with wireless module expander ID=Y |
| Comm OK BZE=y | Bus communication OK with Bus Zone Expander ID=Y |
| Comm OK PS=y | Bus communication restore with power supply expander ID=Y |
| Comm OK Siren=y | Communication OK between the LightSYS and Siren Y |
| Comm OK UO=y | Bus communication restore with UO expander ID=Y |
| Comm OK Z=xx | Bus communication OK with Bus zone XX |
| Comm OK ZE=y | Bus communication restore with zone expander ID=Y |
| Comm. OK GSM | Communication OK between the LightSYS and GSM |
| Comm.OK LRT | Communication OK between the LightSYS and the long range transmitter |
| Conf. Z=xx | Confirmed alarm occurred from zone XX |
| Conf. alarm P=y | Confirmed alarm occurred in partition Y |
| Confirm rs Z=xx | Restore zone confirmed alarm |
| CP reset | The control panel has reset |
| Dat set C=xx | Date defined by user no. XX |
| Day A:P=y | Daily arm on partition Y |
| Day Arm:p=y | Daily Arm on Partition Y |
| Day b:p=y | Arm by scheduler of group B on partition Y |

**Installer Event Log Messages**

| Event Message | Description |
|---|---|
| Day c:p=y | Arm by scheduler of group C on partition Y |
| Day d:p=y | Arm by scheduler of group D on partition Y |
| Day dis:P=y | Daily disarm on partition Y |
| Day hom:P=y | Daily STAY or GROUP arming in partition Y |
| DC Restore Z=XX | DC trouble restore in Bus zone XX |
| DC Trouble Z=XX | DC trouble in Bus zone XX |
| Dis:P=y C=zz | Partition Y disarmed by user ZZ |
| Dis: P=y KF=zz | Partition Y disarmed by remote control ZZ |
| Duress P=y C=xx | Partition Y duress alarm from user no. XX |
| DUST RST Z=xx | Dust trouble restore from WatchOUT DT Bus zone XXX |
| DUST Z=xx | Dust trouble from WatchOUT DT Bus zone XXX |
| EE AC.UPLOAD | Load new parameters from PTM accessory |
| Enter progrm | Entering installer programming from keypad or configuration software |
| Exit program | Exiting installer programming from keypad or configuration software |
| F.Tr OK Z=xx | Trouble restore in fire zone no. XX |
| F.Trbl Z=xx | Trouble in fire zone no. XX |
| Fire Zone=xx | Fire alarm in zone no. XX |
| False code kp=y | False code due to 3 incorrect keypad attempts |
| False code kr=y | False code due to 3 incorrect Access Control attempts |
| False rest.kp=y | False code is restored for keypad |
| False rest.kr=y | False code is restored for key reader |
| Fault z=xx | Trouble in zone XX |
| Fire z=xx | Fire alarm in zone XX |
| Fire kp=y | Fire alarm from keypad (ID=XX) (keys 3 & 4) |
| Foil ok Z=xx | Restore in foil (Day) zone no. XX |
| Foil Z=xx | Trouble in foil (Day) zone no. XX |
| Forced P=y | Partition Y is force armed |
| Found Z=xx | Wireless zone found, zone no. XX |
| Func=xx C=yy | Quick key function XX by user YY |
| Gas Alarm Zn=xx | Gas (natural gas) alert from zone XX defined as a gas detector |

| Event Message | Description |
|---|---|
| Gas Rst. Z=xx | Gas (natural gas) alert restored from zone XX defined as a gas detector |
| GSM:GPRS PW ERR | Authentication password is incorrect |
| GSM:GPRS PW OK | Authentication password is correct |
| GSM:IP OK | IP connection OK |
| GSM:IP Trouble | IP address is incorrect |
| GSM:Mdl comm.OK | Communication between the GSM/GPRS Module and the LightSYS is OK |
| GSM: Module comm. | Internal GSM/GPRS bus module trouble |
| GSM:MS OK | GPRS communication to the MS is OK |
| GSM:MS trouble | GPRS communication failure to the MS |
| GSM:NET avail. | GSM network is not available |
| GSM:NET avai.OK | GSM Network is available |
| GSM:NET qual.OK | GSM Network quality is acceptable |
| GSM:NET quality | The GSM RSSI level is low |
| GSM:PIN cod.err | PIN code entered is incorrect |
| GSM:PIN code OK | PIN code is correct |
| GSM:PUK Cod err | PUK code required |
| GSM:PUK Code OK | PUK Code entered is correct |
| GSM:SIM OK | SIM Card in place |
| GSM:SIM trouble | SIM card missing or not properly sited |
| H.Temp rst Z=xx | High temperature alert restored from zone XX defined as a temperature detector |
| High Temp. Z=xx | High temperature alert from zone XX defined as a temperature detector |
| HOM:P=y C=zz | Partition Y is armed in Stay mode by user ZZ |
| HOME:P=y KF=zz | Partition Y is home armed using keyfob ZZ |
| IPC:DHCP error | Failed to acquire an IP address from the DHCP server |
| IPC:DHCP OK | Succeeded to acquire an IP address from the DHCP server |
| IPC: downld err | IP Card generated a download error |
| IPC: download OK | IP Card download was OK |
| IPC: evnt log ER | IP Card generated an event log error |
| IPC: evnt log OK | IP Card event log generated no error |
| IPC: hardware OK | IP Card hardware is OK |

**Installer Event Log Messages**

| Event Message | Description |
|---|---|
| IPC: hardware error | IP Card generated a hardware error |
| IPC: mail error | IP Card generated a mail error |
| IPC: mail OK | IP Card mail is OK |
| IPC:MS=y error | IP Card Monitoring station ID=Y generated an error |
| IPC:MS=y OK | IP Card Monitoring station ID=Y was OK |
| IPC: Network err | Failed to connect to IP network |
| IPC: Network OK | Successful connection to IP network |
| IPC:NTP error | Failed to acquire time data from the time server |
| IPC:NTP ok | Succeeded to acquire time data from the time server |
| IPC: upgrade err | The IP Card upgrade generated an error |
| IPC: upgrade OK | The IP Card upgrade was OK |
| IR restore Z=xx | Trouble restore in the IR channel of Bus zone XX |
| IR trouble Z=xx | Trouble in the IR channel of Bus zone XXX |
| JAMM. WME=y | Jamming in wireless module expander ID=Y |
| KeyBox Open Zxx | Zone XX of type key box is open |
| KeyBox Rst Z=xx | Zone XX of type key box is restored |
| KSW A: Z=xx P=Y | Group A in partition Y is armed by keyswitch zone XX |
| KSW ARM:Z=xxP=Y | Partition Y is armed by keyswitch zone XX |
| KSW B: Z=xx P=Y | Group B in partition Y is armed by keyswitch zone XX |
| KSW C: Z=xx P=Y | Group C in partition Y is armed by keyswitch zone XX |
| KSW D: Z=xx P=Y | Group D in partition Y is armed by keyswitch zone XX |
| KSW DIS:Z=xxP=Y | Partition Y is disarmed by keyswitch zone XX |
| LB rstr KF=yy | Low battery trouble restore from wireless remote control YY |
| L.Temp rst Z=xx | Low temperature alert restored from zone XX defined as a temperature detector |
| LB RSTR Z=xx | Low battery restore from wireless zone XX |
| Lost Z=xx | Wireless zone lost, zone no. XX |
| Low Bat KF=xx | Low battery trouble from wireless remote control ID=XX |
| Low Bat PS=y | Low battery trouble from power supply ID=Y |
| Low Bat RS Z=xx | Low battery trouble restored from wireless zone no. XX |
| Low Bat Siren=y | Low battery trouble from siren ID=Y |
| Low bat Z=xx | Low battery trouble from wireless zone no. XX |

| Event Message | Description |
|---|---|
| Low Temp. Z=xx | Low temperature alert from zone XX defined as a temperature detector |
| LRT:ACCOUNT ERR | The long range transmitter account generates an error |
| LRT:ACCOUNT OK | The long range transmitter account is OK |
| LRT:HARDWARE OK | The long range transmitter hardware is OK |
| LRT:HARDWRE ERR | The long range transmitter hardware generates an error |
| LRT:LOW BAT | The long range transmitter is experiencing low battery trouble. |
| LRT:LOW BAT OK | The long range transmitter low battery in not troubled |
| LRT:NO BAT | The long range transmitter is experiencing no battery |
| LRT:NO BAT OK | The long range transmitter no battery is not troubling. |
| LRT:SYSTEM ERR | The long range transmitter is generating a system error. |
| LRT:SYSTEM OK | The long range transmitter system status is OK |
| Main Bell RS | Bell trouble restore in Main Panel |
| Main:AC Rstr | AC power restore on main panel |
| Main Aux Rst | Restore of Aux power on Main Panel |
| Main: Bat Rst | Low battery trouble restore from the main panel |
| Main: Low AC | Loss of AC power from the main panel |
| Main: Low Bat | Low battery trouble from the main panel |
| Main:No aux | Failure in the Aux power on Main Panel |
| Main:No bell | Bell trouble in Main Panel |
| Masked Z=XX | Anti mask trouble from zone XX |
| MS=y call error | Communication fail trouble to MS phone no. Y |
| MS=y restore | Communication fail trouble restore to MS phone no. Y |
| MW restore z=xx | Trouble restore in the MW channel of BUZ zone XX |
| MW trouble z=xx | Trouble in the MW channel of BUZ zone XX |
| Next arm:p=y | Partition Y armed in Next Arm mode |
| Next dis:p=y | Partition Y disarmed in Next Disarm mode |
| No aux ps=y | Failure in the Aux power on power supply ID=X |
| No aux ze=y | Failure in the S. Aux power on zone expander Y |
| No bell ps=y | Bell trouble in power supply ID=Y |
| No Com IPC | Communication failure between the LightSYS and IP card |
| No com kp=y | Communication failure between the LightSYS and keypad ID=Y |

**Installer Event Log Messages**

| Event Message | Description |
|---|---|
| No com kr=y | Communication failure between the LightSYS and Key Reader ID=Y |
| No com voice | Communication failure between the LightSYS and the Advanced Voice module |
| No com WME=y | Communication failure between the LightSYS and wireless module expander ID=Y |
| No comm BZE=y | Communication failure between the LightSYS and bus zone expander ID=Y |
| No comm PS=y | Communication failure between the LightSYS and power supply Y |
| No comm Siren=y | Communication failure between the LightSYS and siren Y |
| No comm uo=y | Bus communication failure with UO expander ID=Y |
| No comm z=xx | Bus communication failure with Bus zone XX |
| No comm ze=y | Bus communication failure with zone expander ID=Y |
| No comm. GSM | No communication between the GSM/GPRS Module and the LightSYS |
| No comm. LRT | No communication between the long range transmitter and the LightSYS |
| No fault z=xx | Trouble restore in zone XX (TEOL zone or Bus zone input TEOL) |
| No jam wme=y | Jamming restore on wireless module expander ID=Y |
| No mask z=xx | Anti mask trouble restore from zone XX |
| Nxt hom:p=y | Partition Y is armed in Next Stay mode |
| Overld rs ps=y | Overload restore from 3A SMPS Y |
| Overload ps=y | Overload from 3A SMPS Y |
| Panic Z=xx | |
| Phone fail | If the phone line is cut or the DC level is under 1V |
| Phone restore | Phone line trouble restore |
| PIR rstr Z=xx | PIR trouble restore from Bus zone XX |
| PIR trbl Z=xx | PIR trouble from Bus zone XX |
| Police KF=yy | Police (panic) alarm from remote control YY |
| Police KP=y | Police (panic) alarm from keypad Y |
| POT.LD RS PS=y | Potential overload restore of 3A SMPS joined by 3A SMPS Y |
| POT.OVRLD PS=y | Potential overload of SMPS joined by 3A SMPS Y |

| Event Message | Description |
|---|---|
| PROX FAIL S=y | Fail in the proximity anti approach protection in siren Y |
| PROX OK SIREN=y | Proximity anti approach protection is restored in siren Y |
| PROX TMP RS S=y | Proximity tamper restore from siren ID =Y |
| PRX TMP SIREN=y | Proximity tamper from approaching siren ID=Y |
| PS=yOVER.R C=zz | Overload in 3A SMPS Y. Reset by user ZZ |
| Remote Prog | The system has been programmed from the configuration software |
| Reset: P=y C=zz | Reset of partition ID=Y and user ID=ZZ |
| Restore Z=xx | Alarm restore in zone no. XX |
| Rmt Arm:P=y | Partition Y armed from the configuration software |
| Rmt Dis:P=y | Partition Y disarmed from the configuration software |
| RMT Hom:P=y | Partition Y armed in Stay mode from the CS software |
| Self Fail Z=xx | Bus zone XX has failed the Self Test |
| Self OK Z=xx | Self Test in Bus zone XX has been restored |
| Soak fail Z=xx | Zone XX has failed in the soak test |
| Spec. KP=y | Special alarm from the from wireless keypad Y |
| Spk Trbl RS S=y | Speaker low battery restore from siren Y |
| Spkr Trbl Sir=y | Speaker low battery trouble from siren Y |
| Start exit P=y | Exit time started in partition Y |
| Tamper BZE=y | Tamper alarm from bus zone expander ID=Y |
| Tamper Kp=y | Tamper alarm from keypad ID=Y |
| Tamper LRT | Tamper alarm from long range transmitter |
| Tamper PS=y | Tamper alarm from power supply Y |
| Tamper Siren=y | Tamper alarm from wireless siren Y |
| Tamper UO=y | Tamper alarm from utility output expander Y |
| Tamper Voice | Tamper alarm from Advanced Voice module |
| Tamper WME=y | Tamper alarm from wireless module expander Y |
| Tamper ZE=y | Tamper alarm in zone expander ID=X |
| Tamper Zn=xx | Tamper alarm from zone no. XX |
| Tech alarm Z=xx | Alarm from zone XX defined as Technical |
| Tech rstr Z=xx | Alarm restored from zone XX defined as Technical |
| TMP RS BZE=y | Tamper alarm restore from bus zone expander ID=Y |
| TMP RS KP=y | Keypad tamper restore |

**Installer Event Log Messages**

| Event Message | Description |
|---|---|
| TMP RS PS=y | Tamper alarm restore from power supply expander ID=Y |
| TMP RS UO=y | Tamper alarm restore from UO expander ID=Y |
| TMP RS VOICE | Tamper alarm restore from Advanced Voice module |
| TMP RS WME=y | Tamper alarm restore from wireless module expander ID=Y |
| TMP RS ZE=y | Tamper alarm restore in zone expander ID=Y |
| TMP RS ZN=xx | Tamper alarm restore on zone XX |
| TMP RST LRT | Long Range transmitter tamper alarm reset |
| Tmp rst Siren=y | Tamper alarm restore from wireless siren Y |
| Unbyp Box+Bell | Box + Bell reinstated from bypass |
| Unbyps Zn=xx | Zone no. XX is reinstated from bypass |
| Unknown evnt | Unknown event alert |
| UO REST ZN=xx | A zone defined as “UO Trigger” has been deactivated |
| UO TRIG ZN=xx | A zone defined as “UO Trigger” has been activated |
| VOC:COMM OK | Bus communication OK with Voice Module |
| VOC:NO COMM | Bus communication failure with the Voice Module |
| Water Alrm Zn=xx | Flood alarm from zone no. XX |
| Water rstr Z=xx | Flood alarm restore on zone no. XX |
| WEAK BAT PS=y | Weak battery indication joined by 3A SMPS Y |
| Weak Bat RS PS=y | Weak battery restore indication joined by 3A SMPS Y |
| Z=xx aut bad | Zone self-test failed, zone no. XX |
| Z=xx auto ok | Zone self-test OK, zone no. XX |

# Appendix G Installer Programming Maps

- 1) Programming
- 2)Activities
  - See programming menu on page 214
  - Keypad Sound
    - Chime
    - Buzzer On/Off
  - Follow Me
  - View
    - Trouble
    - Alarm Memory
    - Partition Status
    - Zone Status
    - Service Information
      - Installer
      - System Version
  - Clock
    - Time and Date
    - Scheduler
    - Vacation
  - Event Log
  - Maintenance
    - Walk Test
    - Resistance
    - Siren Test
    - Strobe Test
    - Diagnostics
      - Main Panel
      - Bus Zones
      - Zone Expander
      - Power Supply
      - Siren
      - GSM
      - IP
      - Wireless
      - Voice Module
      - Keypad
      - LRT

## Installer Programming Menu

### 1) System

#### 1) Timers

01) Ex/En Delay 1
02) Ex/En Delay 2
03) Bell Timeout
04) Bell Delay
05) Switch Aux Break
06) Wireless
061) Jamming Time
062) RX Supervise
07) AC Off Delay
08) Guard Delay
09) Swinger Limit
10) Redial Wait
11) Last Exit Sound
12) Buzzer at Stay
13)Status Timer
14) Service Timer
15) Payment Timer
16) Pulse Open
17) Inactivity Timer

#### 2) Controls

1) Basic

01) Quick Arm
02) Quick UO
03) Allow Bypass
04) Quick Bypass
05) False Code Trouble
06) Bell Squawk
07) 3 Minute Bypass
08) Audible Panic
09) Buzzer → Bell

2) Advanced

01)Double Verification Fire Alarms
02) Alarm BUS Cut
03) Code Grand Master
04) Area
05) Global Follower
06) Summer/Winter
07) 24 Hour Bypass
08) Technician Tamper
09) Technician Reset
10) Engineer Tamper
11) Low battery Arming
12) Bell 30/10
13) Fire Temporal Pattern
14) IMQ Install
15) Disable Incoming Calls
16) Disable Keypad at Auto Disarm
17) Buzzer Delay
18) Speaker=Buzzer
19) Confirm Speaker
20) Bell Confirmation
21) Error Speaker Time Out
22) Tamper Report
23)AC Trouble Arm
24) Strobe Arm

3) Communication

1) Monitoring Station Enable
2) Follow Me Enable
3) Configuration Software

4) EN 50131

1) Authorize Installer
2) Override Trouble
3) Restore Alarm
4) Mandatory Event Log
5) Restore Troubles
6) Exit Alarm
7) Entry Alarm
8) 20 minutes signal
9) Attenuation

5) DD243 Prog

1) Bypass Exit/Entry
2) Entry Disable
3) Route Disable
4) Installer Confirmation
5) Key switch Lock
6) Entry Disarm

6) CP-01

1) Exit Restart
2) Auto Stay

7) Device

1) Anti Mask Tamper

| | | | |
|---|---|---|---|
| | | 2) Proximity Anti Mask = Tamper | |
| | | 3) Audible Proximity Tamper | |
| **3) Labels** | | | |
| | 1) System | 3) Partition 2 | 5) Partition 4 |
| | 2) Partition 1 | 4) Partition 3 | |
| **4) Sounds** | | | |
| | 1) Tamper Sound | | |
| | | 1) During Disarm<br>1)Silent<br>2) Bell<br>3) Buzzer (main)<br>4) Bell + Buzzer | 2) During Arm<br>1)Silent<br>2) Bell<br>3) Buzzer (main)<br>4) Bell + Buzzer |
| | 2) Speaker Volume | | |
| | | 1) Trouble<br>2) Chime | 3) Exit/Entry<br>4) Alarm |
| | 3) Wireless Lost Sound | | |
| | | 1) As trouble | 2) As tamper |
| **5) Settings** | | | |
| | 1) DIP 2 Enable/Disable | 3) Erase Wireless | 5) Customer |
| | 2) Default Panel | 4) Standard | 6) Language |
| **6) Automatic Clock** | | | |
| | 1) Server | | |
| | | 1) NTP | 2) DAYTIME |
| | 2) Host | | |
| | 3) Port | | |
| | 4) Time Zone (GMT) | | |
| **7) Service Info.** | | | |
| | 1) Name | | |
| | 2) Phone | | |
| **8) Firmware Update** | | | |
| | 1) Server IP | | |
| | 2) Server port | | |
| | 3) File name | | |
| | 4) Download Files | 1) Via IP | 2) Via GPRS |

| | | | | |
|---|---|---|---|---|
| 2) Zones | | | | |
| **1) Parameters** | | | | |
| | 1) One By One | | | |
| | 2) By Category | | | |
| | | 1) Label | | |
| | | 2) Partition | | |
| | | 3) Type | | |
| | | | 00) Not Used | 18) Special |
| | | | 01) Exit/Entry 1 | 19) Pulsed Keyswitch |
| | | | 02) Exit/Entry 2 | 20) Final Exit |
| | | | 03) Exit(OP)/Entry 1 | 21) Latch Keyswitch |
| | | | 04) Exit(OP)/Entry 2 | 22) Entry Follwer+ Stay |
| | | | 05) Entry Follower | 23) Pulsed Keyswitch Delay |
| | | | 06) Instant | 24) Latch Keyswitch Delay |
| | | | 07) I+ Exit/Entry 1 | 25) Tamper |
| | | | 08) I+ Exit/Entry 2 | 26) Technical |
| | | | 09) I+Exit(OP)/Entry1 | 27) Water |
| | | | 10) I+Exit (OP)/Entry2 | 28) Gas |
| | | | 11) I + Entry Follow | 29) CO |
| | | | 12) I+ Instant | 30) Exit Term |
| | | | 13) UO Trigger | 31) High Temperature |
| | | | 14) Day Zone | 32) Low Temperature |
| | | | 15) 24 Hours | 33) Key Box |
| | | | 16) Fire | 34) Keyswitch Arm |
| | | | 17) Panic | 35) Keyswitch Delayed Arm |
| | | 4) Sound | | |
| | | | 1) At Arm | |
| | | | 2) At Stay | |
| | | | 3) At Disarm | |
| | | 5) Termination | | |
| | | | 01) N/C | 03) DEOL |
| | | | 02) EOL | 04) N/O |
| | | 6) Loop Response | | |
| | | 7) Advanced | | |
| | | | 1) Forced Arming | |
| | | | 2) Pulsed Counter | |
| | | | 3) Abort Alarm | |
| | | | 3) Abort Alarm | |
| | | | 4) BUS Zones Parameters | |
| | | | 5) Wireless Zones Parameters | |
| | 3) Resistance | | | |
| **2) Testing** | | | | |
| | 1) Self Test | | | |
| | 2) Soak Test | | | |
| **3) Cross Zones** | | | | |
| **4) Alarm confirm** | | | | |
| | 1) Confirm partition | | | |
| | 2) Confirm zones | | | |

## 3) Outputs

**0) Nothing**

**1) Follow System**

| | | |
|---|---|---|
| 01) Bell | 09) Bell Burglary | 17) Panic |
| 02) No Telephone Line | 10) Scheduler | 18) Fire |
| 03) Comm. Failure | 11) Switched Aux | 19) Special |
| 04) Trouble | 12) GSM Error | 20) 24 Hours |
| 05) Main Low Bat | 13) Bell Test | |
| 06) AC Loss | 14) Installation | |
| 07) Sensors Test | 15) Walk Test | |
| 08) Battery Test | 16) Burglary | |

**2) Follow Partition**

| | | |
|---|---|---|
| 01) Ready | 11) Fire Trouble | 21) Zone Loss Alarm |
| 02) Alarm | 12) Day (Zone) Trouble | 22) Bell Trigger |
| 03) Arm | 13) Trouble | 23) Strobe Trigger |
| 04) Burglary | 14) Stay | 24) Fail To Arm |
| 05) Fire | 15) Tamper | 25) Confirmed Alarm |
| 06) Panic | 16) Disarm | 26) Duress |
| 07) Special Emergency | 17) Bell | |
| 08) Buzzer | 18) Bell Stay Off | |
| 09) Chime | 19) Zone Bypass | |
| 10) Exit/Entry | 20) Auto Arm Alarm | |

**3) Follow Zone**

| | |
|---|---|
| 1) Zone Follow | 3) Arm Follow |
| 2) Alarm Follow | 4) Disarm Follow |

**4) Follow Code**

## 4) Codes

**1) User**

1) Partition
2) Authority Level

**2) Grand Master**

**3) Installer**

**4) Sub Installer**

**5) Code Length**

1) 4 Digits
2) 6 Digits

- **5) Communication**
  - **1) Method**
    - 1) PSTN
      - 1) Timers
        - 1) PSTN Lost Delay
        - 2) Wait Dial Tone
      - 2) Control
        - 1) Alarm Phone Line
        - 2) Answering machine override
      - 2) Parameters
        - 1) Dial Method
        - 2) Rings To Answer
        - 3) Area Code
        - 4) PBX Prefix
        - 5) Call Wait
    - 2) GSM
      - 1) Timers
        - 1) GSM Lost
        - 2) GSM Net Loss
      - 2) GPRS
        - 1) APN Code
        - 2) APN User Name
        - 3) APN Password
      - 3) Email
        - 1) Mail Host
        - 2) SMTP Port
        - 3) Email Address
        - 4) SMTP User name
        - 5) SMTP Password
      - 4) Controls
        - 1) Caller ID
      - 5) Parameters
        - 1) PIN Code
        - 2) SIM Number
        - 3) SMS Center Phone
        - 4) GSM RSSI
      - 6) Pre Pay SIM
        - 1) Get Credit by
        - 2) Phone To Send
        - 3) Phone To Receive
        - 4) SMS Message
    - 3) IP
      - 1) IP Configuration
        - 1) Obtain IP
        - 2) Panel Port
        - 3) Panel IP
        - 4) Subnet Mask
        - 5) Gateway
        - 6) DNS Primary
        - 7) DNS Secondary
      - 2) Email

| | | | |
|---|---|---|---|
| | | | 1) Mail Host |
| | | | 2) SMTP Port |
| | | | 3) Email Address |
| | | | 4) SMTP Name |
| | | | 5) SMTP Password |
| | | 3) Host Name | |
| | | 4) MS Polling | |
| | | | 1) Primary |
| | | | 2) Secondary |
| | | | 3) Backup |
| | 4) LRT | | |
| | | 1) Account | |
| | | 2) System | |
| | | 3) Periodic Test | |
| | | 4) No Comm Parm | |
| | | 5) Control | |
| | | | 1) Disable Low Battery |
| **2) Monitoring Station** | | | |
| | 1) Report Type | | |
| | | 1) Voice | |
| | | | 1) PSTN/GSM |
| | | | 2) GSM/PSTN |
| | | | 3) PSTN Only |
| | | | 4) GSM Only |
| | | 2) IP | |
| | | | 1) IP/GPRS |
| | | | 2) GPRS/IP |
| | | | 3) IP Only |
| | | | 4) GPRS Only |
| | | 3) SMS | |
| | | 4) Radio | |
| | 2) Accounts | | |
| | 3) Comm. Format | | |
| | | 1) Contact ID | |
| | | 2) SIA | |
| | 4) Controls | | |
| | | 1) Call Save | |
| | | 2) Show Kissoff | |
| | | 3)Show Handshake | |
| | | 4) Audible Kissoff | |
| | | 5) SIA Text | |
| | | 6) Random Periodic test | |
| | 5) Parameters | | |
| | | 1) MS Retries | |
| | | 2) Alarm Restore | |
| | | | 1) On Bell Time out |
| | | | 2) Follow Zone |
| | | | 3) At Disarm |
| | 6) MS Times | | |
| | | 1) Periodic Test | |
| | | 2) Abort Alarm | |

| | | | |
|---|---|---|---|
| | | 3) Cancel Delay | |
| | | 4) Listen In | |
| | | 5) Confirmation | |
| | 7) Report Split | | |
| | | 1) MS Arm/Disarm | |
| | | 2) MS Urgent | |
| | | 3) MS Non Urgent | |
| | 8) Report Codes | | |
| | | 1) Edit Codes | |
| | | 2) Delete All | |
| **3) Configuration Soft.** | | | |
| | 1) Security | | |
| | | 1) Access code | |
| | | 2) Remote ID | |
| | | 3) MS Lock | |
| | 2) Call Back Phones | | |
| | 3) Control | | |
| | | 1) Call Back | |
| | | 2) User Initiate Call | |
| | 4) IP Gateway | | |
| | | 1) IP Address | |
| | | 2) IP Port | |
| **4) Follow Me** | | | |
| | 1) Define | | |
| | | 1) Report Type | |
| | | | 1) Voice |
| | | | 2) Email |
| | | | 3) SMS |
| | | 2) Partition | |
| | | 3) Events | |
| | | 4) Restore Events | |
| | | 5) Remote Control | |
| | | | 1) Remote Listen |
| | | | 2) Remote Program |
| | 2) Controls | | |
| | | 1)Disarm Stop FM | |
| | | 2) Disable report at Stay | |
| | 3) Parameters | | |
| | | 1) FM Retries | |
| | | 2) Voice Msg. Recurrence | |
| | | 3) Periodic Test | |
| **6) Audio** | | | |
| **1) Messages** | | | |
| | 1) Common | 4) Output | |
| | 2)Zone | 5) Macro | |
| | 3)Partition | 6) Library Message | |
| **2) Local Announce** | | | |

**7) Install**

**1) Bus Device**

1) Automatic

2)Manual

01) Keypad
02) Zone Expander
03) Utility Output
04) Power Supply
05) Wireless Expander
06) Proximity Key Reader
07) Voice Module
08) Sounder
09) Bus Zone
10) GSM
11) IP
12) Modem
13) Bus Expanderr
14) LRT

3) Testing

1) Bus Test
2) Bus Scan
3) Verify Module

**2) Wireless Device**

1) RX Calibration

2) Allocation

7221) By RF 1) Zone 2) Keyfob 3) Keypad

7222) By Code 1) Zone 2) Keyfob 3) Keypad

3) Delete

**8) Devices**

**1) Keypad**

1) Label

2) Partition

3) Masking

4) Controls 1) Emergency 2) Multi view 3) Exit beeps

**2) Keyfob**

0)None 1) Arm 2) Disarm 3) Stay 4) Group 5) UO 6) Panic

**3) Sounder**

1✪) Parameter

83101) Label

83102) Strobe 1) Control 2) Blink 3) Arm Squawk

83103) Siren LED 1) Always On 2) Always Off 3) Follow Arm 4) Follow Alarm

83104) Battery Load Test 1) Never 2) Every 24 hours

83105) Proximity Level Response

83106) Volume

83107) Lamp

831071) Type 1) Always On 2) Always Off 3) Scheduler

831072) Brightness

83108 Power Source 1) SAB 2) SCB

83109) Siren Current 1) Low 2) Standard

83110) Alarm Sound 1) – 4)

2) Lamp Times 1) Lamp Start 2) Lamp Stop

**4) Proximity Reader**

1) Masking

2) Controls

**5) Power Supply**

1) PS

8511) Masking

8512) Controls 1) Bell / L Speak

0) Exit

# Appendix H EN 50131 and EN 50136 Compliance

## Compliance Statement

Hereby, RISCO Group declares that the LightSYS series of central units and accessories are designed to comply with:

EN50131-1, EN50131-3 Grade 2
EN50130-5 Environmental class II
EN50131-6 Type A
UK: DD243:2004, PD 6662:2004, ACPO (Police)
EN50136-1-1 and EN50136-2-1 :
ATS 5 for IP/GPRS; ATS 2 for PSTN
Signaling security: - Substitution security S2
- Information security I3

## EN50136 Compliance

- IP and GSM modules are complying with the following standards:
  - EN50136-1-1
  - EN50136-1-1/A2
  - EN50136-2-1
  - EN50136-2-1/A1
  - EN50136-2-2:1998
- PSTN complies with the following standards:
  - EN50136-1-2:1998
  - EN50136-1-3:1998
  - EN50136-2-2:1998
  - EN50136-2-3:1998
  - EN50136-1-4:1998
  - EN50136-2-4:1998
- PSTN can be connected to Monitoring Station via any EN50136 compliant receiver, which shall meet all requirements of securing messages.
- When IP and/or GSM modules are in use, IP Receiver software is also in use. The IP Receiver should be connected to automation software, which serves as the EN50136-2-1 A1:2001 annunciator. If connection between the IP Receiver and the automation software is lost, an error message will appear on the IP Receiver queue.

- In order to have an indication of ACK received from the receiving center transceiver, the parameter Kiss-Off Y/N (see page 4-54) should be set to Y.

### Possible logical keys calculations:

- Logical codes are codes punched in the wireless keypad to allow Level 2 (users) and Level 3 (installer) access.
- All codes - 4 digits structure: xxxx
- 0-9 can be used for each digit.
- There are no disallowed codes - codes from 0001 to 9999 are acceptable.
- Invalid codes cannot be created due to the fact that after the code 4th digit has been punched, "Enter" is automatically applied. Code is rejected when trying to create a non existing code.

### Possible physical keys calculations:

- Physical keys are implemented in the Wireless Keyfobs.
- It is assumed that only a user possesses a Keyfobs, therefore a physical key is considered as access Level 2
- Each Keyfob has 24 bit identification code comprising 2^24 options.
- A Keyfob has to be recognized and registered by the LightSYS, therefore, a "write" process must be performed.
- A valid Keyfob is one "Learned" by the panel and allowing Arm/Disarm
- A non valid Keyfob is one not "Learned" by the panel and not allowing Arm/Disarm.

### System Monitoring

- The main unit is monitored for AC trouble, battery fault, low battery and more.
- All other wireless elements are monitored for low voltage battery.

## Setting the LightSYS to comply with EN 50131 requirements

1. Access the Installer programming mode.
2. From the [1] System menu select [5] to access the Settings menu.
3. From the Settings menu select [4] to access the Standard option.
4. Select EN 50131. Once selected, the following changes will occur in the LightSYS software:

| Feature | EN 50131 Compliance | |
|---|---|---|
| **Timers** | **Quick Key** | **Required Value:** |
| Phone Line cut delay | ⑤①①① ❶ | Immediate (0 minutes) |
| Entry Delay | ①①⓪①❶, ①①⓪②❶ | 45 seconds (maximum allowed) |
| AC Delay | ①①⓪②❼ | Immediate (0 minutes) |
| Jamming Time | ①①⓪⑥❶ | 0 minutes |
| RX Supervision | ①①⓪⑥❷ | 2 hours |
| **System Controls** | **Quick Key** | |
| Quick Arm | ①②① ❍❶ | Set to NO |
| False Code Trouble | ①②① ❍❺ | Set to Yes |
| Forced Arming | ①②① ❶❷ | Set to NO |
| Authorize installer | ①②④ ❍❶ | Set to YES |
| Override Trouble | ①②④ ❍❷ | Set to NO |
| Restore Alarm | ①②④ ❍❸ | Set to YES |
| Mandatory Event Log | ①②④ ❍❹ | Set to YES |
| Restore Trouble | ①②④ ❍❺ | Set to YES |
| Exit Alarm | ①②④ ❍❻ | Set to NO |
| Entry Alarm | ①②④ ❍❼ | Set to YES |
| 20 minutes signal | ①②④ ❍❽ | Set to YES |
| Attenuation | ①②④ ❍❾ | Set to YES |

- After Level 2, 3 or 4 users (users with access codes) are no longer accessing the system, indications are made inaccessible to Level 1 users (users who don't have a code) by the display showing only "Enter code:"
- After entering 3 invalid user codes, an 'invalid code' signal will be alerted to the receiving centre and recorded in the event log. The invalid code will continue to alert in the system until restored by a user with a code

# Appendix I Remote Software Upgrade

This appendix explains how to perform remote upgrade of your LightSYS main panel software using the LightSYS keypad or SMS command. Remote software upgrade is performed via IP or GPRS.

**Notes:**

1. It is recommended to perform the upgrade process from keypad 1 (Not wireless keypad)
2. Software upgrade does not delete all previous parameters of the panel.

### Step 1: Set parameters for IP/GPRS Communication

1. Define all parameters required to set GPRS or IP communication as explained in the Communication section of the LightSYS (See page 126).

### Step 2: Enter the location of the upgrade file

1. In the ① `System` menu, ⑧ `Firmware Upgrade` submenu, enter the relevant information regarding the location of the upgrade file:

   ❶ **Server IP**: Enter the IP address of the router/gateway where the upgrade file is located.
   Default: **firmware.riscogroup.com**

   ❷ **Port**: Enter the port on the router/gateway where the upgrade file is located.
   Default: **00080**

   ❸ **File Name**: Enter the upgrade file name. Default: CMD.TXT

   **Notes:**

   1. The File Name is case sensitive
   2. Please contact Customer Support services for the file name parameters.

### Step 3: Activate Remote Upgrade from the Keypad

1. From the installer main programming menu select ① `System` menu, ⑧ `Firmware Upgrade` submenu ❹ `Download File` option.
2. Select the upgrade communication path as follows:

   ❶ **Via IP**

   ❷ **Via GPRS**

**Notes:**

Each option appears only if the relevant module (IP or GPRS module) is installed in the system.
If your panel is equipped with an IP or GSM module you can start the download file procedure by sending an SMS command to the panel in the following format:
(If address and port are configured and updated)

a. Via IP 97239637777IPFILE.
b. Via GSM (GPRS) 97239637777GSMFILE.

(Address and port can be added to the SMS command string as per the following. If specified, these parameters also override any existing panel settings)

a. Via IP 97239637777IPFILE10.10.10.6:80.
b. Via GSM (GPRS) 97239637777GSMFILE212.150.25.223:80.

3. Once selected, the LightSYS will start downloading the required files. The upgrade procedure may take approximately 40 minutes to complete. This will vary according to whether the procedure is performed via GPRS or IP. Once the files are downloaded the panel automatically starts with the upgrade procedure of the units connected to the system.

**Note:**

1. During the upgrade process of the panel firmware there will be no display on the keypad.
2. While downloading the files for the upgrade procedure the STATUS green LED on the main panel will flash slowly. When the upgrade procedure starts it will start to flask rapidly.

### Step 4: Verify that upgrade has been successful

1. From the main display press and enter the installer code followed by .
2. Using the arrows scroll to Maintenance> Diagnostics> Main panel>Version. The upgraded version of the main panel will appear.
3. To view the other accessories version navigate to the required menus under the Maintenance> Diagnostics menu.

**Note:**

If upgrade has failed the previous software version of the main panel / accessory version will appear.

## FCC Note

This equipment has been tested and found to comply with the limits for a Class B digital device, pursuant to Part 15 of the FCC rules. These limits are designed to provide reasonable protection against harmful interference in a residential installation. This equipment generates, uses and can radiate radio frequency energy and, if not installed and used in accordance with the instructions, may cause harmful interference to radio communications. However, there is no guarantee that interference will not occur in a particular installation. If this equipment does cause harmful interference to radio or television reception, which can be determined by turning the equipment off and on, the user is encouraged to try to correct the interference by one or more of the following measures:

- Reorient or relocate the receiving antenna.
- Increase the separation between the equipment and receiver.
- Connect the equipment to an outlet on a circuit different from that to which the receiver is connected.
- Consult the dealer or an experienced radio/TV technician.

| FCC Warning |
| --- |
| The manufacturer is not responsible for any radio or TV interference caused by unauthorized modifications to this equipment. Such modifications could void the user's authority to operate the equipment. |

## RTTE Compliance Statement

Hereby, RISCO Group declares that this equipment is in compliance with the essential requirements and other relevant provisions of Directive 1999/5/EC. For the CE Declaration of Conformity please refer to our webs

# Notes

# Notes

# Notes

## RISCO Group Limited Warranty

RISCO Group and its subsidiaries and affiliates ("Seller") warrants its products to be free from defects in materials and workmanship under normal use for 24 months from the date of production. Because Seller does not install or connect the product and because the product may be used in conjunction with products not manufactured by the Seller, Seller cannot guarantee the performance of the security system which uses this product. Seller's obligation and liability under this warranty is expressly limited to repairing and replacing, at Seller's option, within a reasonable time after the date of delivery, any product not meeting the specifications. Seller makes no other warranty, expressed or implied, and makes no warranty of merchantability or of fitness for any particular purpose.

In no case shall seller be liable for any consequential or incidental damages for breach of this or any other warranty, expressed or implied, or upon any other basis of liability whatsoever.

Seller's obligation under this warranty shall not include any transportation charges or costs of installation or any liability for direct, indirect, or consequential damages or delay.

Seller does not represent that its product may not be compromised or circumvented; that the product will prevent any personal injury or property loss by burglary, robbery, fire or otherwise; or that the product will in all cases provide adequate warning or protection.

Seller, in no event shall be liable for any direct or indirect damages or any other losses occurred due to any type of tampering, whether intentional or unintentional such as masking, painting or spraying on the lenses, mirrors or any other part of the detector.

Buyer understands that a properly installed and maintained alarm may only reduce the risk of burglary, robbery or fire without warning, but is not insurance or a guaranty that such event will not occur or that there will be no personal injury or property loss as a result thereof.

Consequently seller shall have no liability for any personal injury, property damage or loss based on a claim that the product fails to give warning. However, if seller is held liable, whether directly or indirectly, for any loss or damage arising under this limited warranty or otherwise, regardless of cause or origin, seller's maximum liability shall not exceed the purchase price of the product, which shall be complete and exclusive remedy against seller.

No employee or representative of Seller is authorized to change this warranty in any way or grant any other warranty.

WARNING: This product should be tested at least once a week.

## Contacting RISCO Group

RISCO Group is committed to customer service and product support. You can contact us through our website (www.riscogroup.com) or at the following telephone and fax numbers:


United Kingdom
Tel: +44-(0)-161-655-5500
E-mail: support-uk@riscogroup.com

Italy
Tel: +39-02-66590054
E-mail: support-it@riscogroup.com

Spain
Tel: +34-91-490-2133
E-mail: support-es@riscogroup.com

France
Tel: +33-164-73-28-50
E-mail: support-fr@riscogroup.com

Belgium (Benelux)
Tel: +32-2522-7622
E-mail: support-be@riscogroup.com

USA
Tel: +1-631-719-4400
E-mail: support-usa@riscogroup.com

Brazil
Tel: +55-11-3661-8767
E-mail: support-br@riscogroup.com

China (Shanghai)
Tel: +86-21-52-39-0066
E-mail: support-cn@riscogroup.com

China (Shenzhen)
Tel: +86-755-82789285
E-mail: support-cn@riscogroup.com

Poland
Tel: +48-22-500-28-40
E-mail: support-pl@riscogroup.com

Israel
Tel: +972-3-963-7777
E-mail: support@riscogroup.com


RISCO product was purchased from


All rights reserved.
No part of this document may be reproduced in any form without prior written permission from the publisher.