riscogroup.com

RISCO University

RISCO GROUP

Creating Security Solutions, With Care

LightSYS™ 2 v5.64

Installation

Lesson Objectives

By the end of this lesson, you will be able to…

- Understand the installation documentation
- Describe the installation workflow
- Explain each step of the installation workflow
- Troubleshoot LightSYS installation issues
- Understand the common characteristics of an installation

Agenda

- ✔ Installation Documentation
- ✔ Installation Workflow
- ✔ Installation Troubleshooting

Installation Documentation

Each device has its own installation documentation

Follow the installation documentation for proper installation of the device

IWISE - Installation Documentation

IWISE™ DT AM GRADE 3 WITH ACT™

The iWISE™ Dual Technology Anti Mask Detector with ACT™ represents the ultimate in detector technology for high-risk applications. This model combines two crucial anti-camouflage technologies, preventing BOTH masking AND cloaking attempts. Sophisticated Anti Masking technology detects attempts to spray or paint the lens or otherwise obstruct the view, while ROKONET 's revolutionary Anti-Cloak™ Technology detects intruder attempts to camouflage themselves.
Every attempt to bypass MW or PIR sensors is detected by the unprecedented intelligence of this detector.

IWISE™ DT AM GRADE 3 FEATURES

- MW & PIR technologies
- Anti-Cloak™ Technology (Patent Pending)
- Active IR Anti-Masking with separate relay
- Coverage 15m (50 ft) / 25m (82ft)
- EN50131-1 Grade 3 approved
- Indicates trouble in either MW or PIR channels
- Creep Zone
- Microwave range adjustment
- "Green line" setting - MW disabled during UNSET
- Flexible installation height up to 3.3 m (10' 10")
- Opto-relays – low current consumption and long life cycle
- Wall and cover tampers
- Selectable EOL (End of Line) Resistors
- Local Self Test
- Remote Self Test Input
- LEDs disable input
- 30 V/m RF immunity
- Anti-fluorescent interference signal processing
- Wall/corner or ceiling swivel (optional)
- Wall tamper-proof swivel (optional)
- Corridor lens (optional)

Detection is based on:

PIR (passive infra-red) which responds to changes in the ambient thermal radiation caused when an intruder crosses the protected area.

MW (microwave), which transmits, signals and analyzes the frequency changes of the reflected signal from an intruder using the Doppler effect.

An **ALARM** is initiated only when both technologies trigger simultaneously. Detection occurs only in areas where IR and MW patterns overlap thus greatly reducing the possibility of false alarms.

ANTI-MASKING

Detects any attempt by a person or object in close proximity to the unit to mask the detector. On detection of masking both AM and Alarm Relay are opened and the red LED flashes (see note below) until the masking object is removed.

NOTE:
The Anti-Mask function is operational only in UNSET mode.

ANTI-CLOAK™ TECHNOLOGY

ACT™ - Anti-Cloak™ Technology identifies cases in which PIR detection is problematic and automatically switches to microwave-only detection.

Anti-Cloak™ Technology will cope with any attempt of a burglar using camouflage techniques to conceal his IR radiation. When this situation is identified ACT™ automatically switches the detector to trigger alarms based primarily on detection from the microwave channel for a predefined window of time.

ACT™ also overcomes PIR technology's limitation of poor detection sensitivity when the ambient temperature is close to that of the human body. When this occurs the detector switches to single channel microwave triggering of alarms.

USING ACT™ MODE

To activate this mode, set the jumper to ACT™ ON/OFF Jumper (Refer to Fig. 1).
The MW range must be adjusted to the minimum needed, using the potentiometer located at the bottom of the PCB. It is important that the potentiometer is set to its lowest possible setting, which will provide full coverage for the entire protected area.
Do not use ACT™ mode in long range /corridor applications if you are expecting that there will be moving objects behind or on the side of the required protected area (the corridor).
Refer to Fig. 5

SELF TEST

Local Self Test
If there is no alarm detection after a 1 hour period the detector will self test both the PIR and MW channels. In case the local self test has failed, the AM Relay is activated.

Remote Self Test
The same self test can be initiated at any time by a control panel. When 12V attached to SET terminal is disconnected the Remote Self Test is activated. In case the remote self test passes, the Alarm Relay is activated for 5 seconds. In case test fails AM Relay is activated.

SELECTABLE EOL (End of Line) RESISTORS (See Fig. 2)

Two jumpers arrays allow selection of alarm and tamper EOL resistors of 1K, 2.2K, 4.7K and 5.6K with most control panels on the market. See Fig. 2 for selection.

"GREEN LINE" MW MODULE ACTIVATING/DEACTIVATING

In order to eliminate the MW emission in UNSET mode, 12V must be attached to the LED terminal. The detector is in the UNSET mode when no signal or GND are attached to SET terminal.

LED DISPLAY

When LED Jumper is ON and when no signal or GND are attached to the LED terminal:
- YELLOW LED indicates PIR detection
- GREEN LED indicates MW detection
- RED LED indicates alarm
- At Power-up, the LEDs will blink continuously, one after the other, until the end of the warm-up period (2-3 minutes).
- Flashing RED LED indicates AM detection.
- Flashing GREEN LED indicates trouble on MW channel.
- Flashing YELLOW LED indicates trouble on PIR channel.

NOTE:
- **AM and Trouble indications continue until masking objects is removed or trouble is corrected.**
- **LEDs maybe enabled/disabled by the panel via the LED terminal and the LEDs jumper should be closed. LEDs are disabled by attaching 12V to the LED terminal.**

INSTALLATION

STEP 1 PRELIMINARY CONSIDERATIONS

Before installation, study the space to be protected carefully in order to choose the exact placement of the unit and lens for the best possible coverage.

Corner installations are recommended. The Detector should be installed so that the beam patterns are at 45° (optimal) to the intruder's expected path. Installation height should be 2.5m (8'2") with the RL-15V/RL-17V lens. Use Fig 3 and step 5 for guidance.

WARNING: THE UNIT SHOULD NOT BE MOUNTED IN DIRECT SUNLIGHT OR NEAR ANY HEAT SOURCES. THE DETECTION SECTORS SHOULD BE POINTED EITHER TOWARDS A WALL OR TOWARDS THE FLOOR (NOT TOWARDS WINDOWS NOR CURTAINS). INSTALL ON SMOOTH SURFACES ONLY.

STEP 2 OPENING THE FRONT COVER

To open the front cover, turn the screw 3 full turns counterclockwise. With the screw loosened, press it 'in' to release the front cover. If a fixing screw is not used, press the tab, which is located behind the screw hole. The front cover can now be removed.

STEP 3 REMOVING THE PC BOARD

Loosen the holding screw, which is located on the right hand side of the PCB and slide the PCB up until the screw enters the widened opening. The PCB can now be lifted off.

STEP 4 MOUNTING

The iWISE™ DT AM can either be mounted on a flat surface or in a corner.
a.Open the knockout holes on the rear cover, include the wall tampers knockout hole.
b.Insert the cable through the cable opening.
c.Mount the rear cover in its final location.
d.Seal the remaining holes with sealant.
e.After mounting the rear cover, return the PCB into its desired position.

STEP 5 PC BOARD ADJUSTMENT

After the Detector base has been mounted, reinstall the PCB. To choose the correct vertical adjustment position for WIDE ANGLE LENS RL115DV installed at a height between 2.1m - 2.7m (6'11" - 8'10") use the scale on the bottom left hand side of the PCB as follows:

SCALE POSITION BASED ON ROOM SIZE: FOR RK815DTG3

Mounting Height	LONG	SHORT
2.1m-2.7m (6'11"-8'10")	15m (49'2")	6m (19'8")
2.7m-3.3m (6'11"-10'10")	* 15m (*49'2")	–

*** NOTE: For installations above 2.7m (8'10"); for every 30cm (1') additional height, slide the PCB up one small line (on the scale). The line needs to be located in the middle of the plastic scale mark. Refer to the diagram Fig. 6.**

FINE TUNING OF THE PROTECTED AREA:

Slide the board upwards - to lower the beams and reduce the range.
Slide the board downwards - to raise the beams and increase the range.

For **CORRIDOR**: Select position to **'LONG'** use 2.5m/8'2" mounting height. When completed, fasten the screw to secure the PCB in the desired position.

STEP 6 TERMINAL WIRING

Connect the cable to the terminal block at the top of the PCB as follows:

12 VDC:	Power supply input.
ALARM:	Normally closed output.
TAMPER:	Normally closed dry output.
AM:	Normally closed output.
LED:	12V activated input
SET:	12V activated input

STEP 7 JUMPER SETTING (See Fig. 1)

The iWISE™ DT AM has a few jumpers that can either be in (used) or out (unused).

Unused jumpers should be placed on one pin only to prevent their loss.

STEP 8 WALK TEST

Two minutes after applying power (warm-up period), walk test the Detector over the entire protected area to verify proper operation of the unit.

NOTE:
- Ensure you replace the front cover before carrying out a Walk Test.
- **The MW range can be adjusted by using the potentiometer, which is located at the bottom of the PCB. It is important to set the potentiometer to the lowest possible setting that will still provide enough coverage for the entire protected area.**

STEP 9 FINAL SETUP

After completing the installation and the testing stages, ensure all jumpers are in their desired positions. The unit is now ready for use.

PROCEDURE FOR CHANGING LENSES (See Fig. 4.)

A pigmented lens is attached to the inside of the front plastic cover using a sensor protective sleeve.
1. Remove the sensor protecting sleeve by pushing up the clip that holds the top part of the sleeve to the front cover.
2. Disconnect the lens from the sleeve by gently lifting it from the holding pins that secure it to the sides of the sleeve.
3. Select the desired lens and make sure that the cut corners are pointed upwards.
4. Place the two pins, which are located on the top and bottom of the lens, into the matching holes on the sleeve.
5. Place the holes on either side of the lens into their matching holding pins located on the sides of the sleeve.
6. Insert the protective sleeve back into place on the front cover.

SPECIFICATIONS

ELECTRICAL
Current consumption: 12mA at 12 VDC, 37mA at 12 VDC (max. with all LED's ON)
Voltage requirements: 9-16 VDC
Alarm contacts: 24 VDC, 0.1A
Tamper contacts: 24 VDC, 0.1A
AM contacts: 24 VDC, 0.1A

OPTICAL
Filtering: White Light Protection

PHYSICAL
Size: 127.6 x 64.2 x 40.9mm
(5 x 2.5 x 1.6 in.)

ENVIRONMENTAL
RF immunity (10MHz to 1GHz): 30V/m
Operating temperature: -20°C to 55°C (-4°F to 131°F)
Storage Temperature: -20°C to 60°C (-4°F to 140°F)

Ordering Information

Part number	Description
RK815DTG500A	IWISE DT AM 15m 10.525 GHz Grade 3
RK815DTG3UKA	IWISE DT AM 15m 10.587 GHz Grade 3
RK815DTG3FRA	IWISE DT AM 15m 9.9 GHz Grade 3
RK815DTG3DEA	IWISE DT AM 15m 9.35 GHz Grade 3
RK825DTG500A	IWISE DT AM 25m 10.525 GHz Grade 3
RK825DTG3UKA	IWISE DT AM 25m 10.587 GHz Grade 3
RK825DTG3FRA	IWISE DT AM 25m 9.9 GHz Grade 3
RK825DTG3DEA	IWISE DT AM 25m 9.35 GHz Grade 3

ROKONET LIMITED WARRANTY

Rokonet Electronics, Ltd. and its subsidiaries and affiliates ("Seller") warrants its products to be free from defects in materials and workmanship under normal use for 12 months from the date of production. Because Seller does not install or connect the product and because the product may be used in conjunction with products not manufactured by the Seller, Seller can not guarantee the performance of the security system which uses this product. Sellers obligation and liability under this warranty is expressly limited to repairing and replacing, at Sellers option, within a reasonable time after the date of delivery, any product not meeting the specifications. Seller makes no other warranty, expressed or implied, and makes no warranty of merchantability or of fitness for any particular purpose.

In no case shall seller be liable for any consequential or incidental damages for breach of this or any other warranty, expressed or implied, or upon any other basis of liability whatsoever.

Sellers obligation under this warranty shall not include any transportation charges or costs of installation or any liability for direct, indirect, or consequential damages or delay.

Seller does not represent that its product may not be compromised or circumvented; that the product will prevent any personal; injury or property loss by burglary, robbery, fire or otherwise; or that the product will in all cases provide adequate warning or protection. Buyer understands that a properly installed and maintained alarm may only reduce the risk of burglary, robbery or fire without warning, but is not insurance or a guaranty that such will not occur or that there will be no personal injury or property loss as a result.

Consequently seller shall have no liability for any personal injury, property damage or loss based on a claim that the product fails to give warning. However, if seller is held liable, whether directly or indirectly, for any loss or damage arising from under this limited warranty or otherwise, regardless of cause or origin, sellers maximum liability shall not in any case exceed the purchase price of the product, which shall be complete and exclusive remedy against seller.

No employee or representative of Seller is authorized to change this warranty in any way or grant any other warranty.

WARNING: This product should be tested at least once a week.

ROKONET
RISCO GROUP

ROKONET ELECTRONICS LTD.
14 HACHOMA ST.
75655 RISHON LETZION. ISRAEL.
TEL: (972) 3 963 7777
FAX: (972) 3 961 6584
www.rokonet.com

ROKONET USA:	TEL: 1 305	592 3820
	FAX: 1 305	592 3825
RISCO GROUP UK:	TEL: 44 (0)	161 655 5500
	FAX: 44 (0)	161 655 5501
ROKONET SPAIN	TEL: 34 (91)	4902133
	FAX: 34 (91)	4902134
ROKONET ITALY:	TEL: 39 (02)	3925 354
	FAX: 39 (02)	3925 131
ROKONET BRAZIL:	TEL: 55 (11)	3661-8767
	FAX: 55 (11)	3661-7783

EN50131-1 Grade 3 Approved

© Rokonet Electronics Ltd.

5IN815DTG3 06/05

INSTALLATION INSTRUCTIONS

iWISE
Green Line
DT AM 15m / 25m

ROKONET
RISCO GROUP

IWISE - Installation Documentation

Description and Main Features

IWISE™ DT AM GRADE 3 WITH ACT™

The iWISE™ Dual Technology Anti Mask Detector with ACT™ represents the ultimate in detector technology for high-risk applications. This model combines two crucial anti-camouflage technologies, preventing BOTH masking AND cloaking attempts. Sophisticated Anti Masking technology detects attempts to spray or paint the lens or otherwise obstruct the view, while ROKONET 's revolutionary Anti-Cloak™ Technology detects intruder attempts to camouflage themselves.
Every attempt to bypass MW or PIR sensors is detected by the unprecedented intelligence of this detector.

IWISE™ DT AM GRADE 3 FEATURES

- MW & PIR technologies
- Anti-Cloak™ Technology (Patent Pending)
- Active IR Anti-Masking with separate relay
- Coverage 15m (50 ft) / 25m (82ft)
- EN50131-1 Grade 3 approved
- Indicates trouble in either MW or PIR channels
- Creep Zone
- Microwave range adjustment
- "Green line" setting - MW disabled during UNSET
- Flexible installation height up to 3.3 m (10'10")
- Opto-relays – low current consumption and long life cycle
- Wall and cover tampers
- Selectable EOL (End of Line) Resistors
- Local Self Test
- Remote Self Test Input
- LEDs disable input
- 30 V/m RF immunity
- Anti-fluorescent interference signal processing
- Wall/corner or ceiling swivel (optional)
- Wall tamper-proof swivel (optional)
- Corridor lens (optional)

Detection is based on:

PIR (passive infra-red) which responds to changes in the ambient thermal radiation caused when an intruder crosses the protected area.
MW (microwave), which transmits, signals and analyzes the frequency changes of the reflected signal from an intruder using the Doppler effect.
An **ALARM** is initiated only when both technologies trigger simultaneously. Detection occurs only in areas where IR and MW patterns overlap thus greatly reducing the possibility of false alarms.

ANTI-MASKING

Detects any attempt by a person or object in close proximity to the unit to mask the detector. On detection of masking both AM and Alarm Relay are opened and the red LED flashes (see note below) until the masking object is removed.

NOTE:
The Anti-Mask function is operational only in UNSET mode.

ANTI-CLOAK™ TECHNOLOGY

ACT™ - Anti-Cloak™ Technology identifies cases in which PIR detection is problematic and automatically switches to microwave-only detection.

Anti-Cloak™ Technology will cope with any attempt of a burglar using camouflage techniques to conceal his IR radiation. When this situation is identified ACT™ automatically switches the detector to trigger alarms based primarily on detection from the microwave channel for a predefined window of time.

ACT™ also overcomes PIR technology's limitation of poor detection sensitivity when the ambient temperature is close to that of the human body. When this occurs the detector switches to single channel microwave triggering of alarms.

USING ACT™ MODE

To activate this mode, set the jumper to ACT™ ON/OFF Jumper (Refer to Fig. 1).
The MW range must be adjusted to the minimum needed, using the potentiometer located at the bottom of the PCB. It is important that the potentiometer is set to its lowest possible setting, which will provide full coverage for the entire protected area.
Do not use ACT™ mode in long range /corridor applications if you are expecting that there will be moving objects behind or on the side of the required protected area (the corridor).
Refer to Fig. 5

SELF TEST

Local Self Test
If there is no alarm detection after a 1 hour period the detector will self test both the PIR and MW channels. In case the local self test has failed, the AM Relay is activated.

Remote Self Test
The same self test can be initiated at any time by a control panel. When 12V attached to SET terminal is disconnected the Remote Self Test is activated. In case the remote self test passes, the Alarm Relay is activated for 5 seconds. In case test fails AM Relay is activated.

SELECTABLE EOL (End of Line) RESISTORS (See Fig. 2)

Two jumpers arrays allow selection of alarm and tamper EOL resistors of 1K, 2.2K, 4.7K and 5.6K with most control panels on the market. See Fig. 2 for selection.

"GREEN LINE" MW MODULE ACTIVATING/DEACTIVATING

In order to eliminate the MW emission in UNSET mode, 12V must be attached to the LED terminal. The detector is in the UNSET mode when no signal or GND are attached to SET terminal.

LED DISPLAY

When LED Jumper is ON and when no signal or GND are attached to the LED terminal:
- YELLOW LED indicates PIR detection
- GREEN LED indicates MW detection
- RED LED indicates alarm
- At Power-up, the LEDs will blink continuously, one after the other, until the end of the warm-up period (2-3 minutes).
- Flashing RED LED indicates AM detection.
- Flashing GREEN LED indicates trouble on MW channel.
- Flashing YELLOW LED indicates trouble on PIR channel.

NOTE:
Anti masking objects is removed or trouble is corrected
LEDs may be disabled/disabled by the

Before installation, study the space to be protected carefully in order to choose the exact placement of the unit and lens for the best possible coverage.

Corner installations are recommended. The Detector should be installed so that the beam patterns are at 45° (optimal) to the intruder's expected path. Installation height should be 2.5m (8'2") with the RL-15V/RL-17V lens. Use Fig 3 and step 5 for guidance.

WARNING: THE UNIT SHOULD NOT BE MOUNTED IN DIRECT SUNLIGHT OR NEAR ANY HEAT SOURCES. THE DETECTION SECTORS SHOULD BE POINTED EITHER TOWARDS A WALL OR TOWARDS THE FLOOR (NOT TOWARDS WINDOWS NOR CURTAINS). INSTALL ON SMOOTH SURFACES ONLY.

STEP 2 OPENING THE FRONT COVER

To open the front cover, turn the screw 3 full turns counterclockwise. With the screw loosened, press it 'in' to release the front cover. If a fixing screw is not used, press the tab, which is located behind the screw hole. The front cover can now be removed.

STEP 3 REMOVING THE PC BOARD

Loosen the holding screw, which is located on the right hand side of the PCB and slide the PCB up until the screw enters the widened opening. The PCB can now be lifted off.

STEP 4 MOUNTING

The iWISE™ DT AM can either be mounted on a flat surface or in a corner.
a.Open the knockout holes on the rear cover, include the wall tampers knockout hole.
b.Insert the cable through the cable opening.
c.Mount the rear cover in its final location.
d.Seal the remaining holes with sealant.
e.After mounting the rear cover, return the PCB into its desired position.

STEP 5 PC BOARD ADJUSTMENT

After the Detector base has been mounted, reinstall the PCB. To choose the correct vertical adjustment position for WIDE ANGLE LENS RL115DV installed at a height between 2.1m - 2.7m (6'11" - 8'10") use the scale on the bottom left hand side of the PCB as follows:

SCALE POSITION BASED ON ROOM

diagram Fig. 6.

FINE TUNING OF THE PROTECTED AREA:

Slide the board upwards - to lower the beams and reduce the range.
Slide the board downwards - to raise the beams and increase the range.

For **CORRIDOR:** Select position to **'LONG'** use 2.5m/8'2" mounting height. When completed, fasten the screw to secure the PCB in the desired position.

STEP 6 TERMINAL WIRING

Connect the cable to the terminal block at the top of the PCB as follows:

12 VDC:	Power supply input.
ALARM:	Normally closed output.
TAMPER:	Normally closed dry output.
AM:	Normally closed output.
LED:	12V activated input
SET:	12V activated input

STEP 7 JUMPER SETTING (See Fig. 1)

The iWISE™ DT AM has a few jumpers that can either be in (used) or out (unused).
Unused jumpers should be placed on one pin only to prevent their loss.

STEP 8 WALK TEST

Two minutes after applying power (warm-up period), walk test the Detector over the entire protected area to verify proper operation of the unit.

NOTE:
- **Ensure you replace the front cover before carrying out a Walk Test.**
- **The MW range can be adjusted by using the potentiometer, which is located at the bottom of the PCB. It is important to set the potentiometer to the lowest possible setting that will still provide enough coverage for the entire protected area.**

STEP 9 FINAL SETUP

After completing the installation and the testing stages, ensure all jumpers are in their desired positions. The unit is now ready for use.

PROCEDURE FOR CHANGING LENSES (See Fig. 4.)

A pigmented lens is attached to the inside of the front plastic cover using a sensor protective sleeve.
1. Remove the sensor protecting sleeve by pushing up the clip that holds the top part of the sleeve to the front cover.
2. Disconnect the lens from the sleeve by gently lifting it from the holding pins that secure it to the sides of the sleeve.
3. Select the desired lens and make sure that the

SPECIFICATIONS

VDC (max. with all LED's ON)
Voltage requirements: 9-16 VDC
Alarm contacts: 24 VDC, 0.1A
Tamper contacts: 24 VDC, 0.1A
AM contacts: 24 VDC, 0.1A

OPTICAL
Filtering: White Light Protection

PHYSICAL
Size: 127.6 x 64.2 x 40.9mm
(5 x 2.5 x 1.6 in.)

ENVIRONMENTAL
RF immunity (10MHz to 1GHz): 30V/m
Operating temperature: -20°C to 55°C (-4°F to 131°F)
Storage Temperature: -20°C to 60°C (-4°F to 140°F)

Ordering Information

Part number	Description
RK815DTG500A	IWISE DT AM 15m 10.525 GHz Grade 3
RK815DTG5UKA	IWISE DT AM 15m 10.687 GHz Grade 3
RK815DTG5FRA	IWISE DT AM 15m 9.9 GHz Grade 3
RK815DTG5DEA	IWISE DT AM 15m 9.36 GHz Grade 3
RK825DTG500A	IWISE DT AM 25m 10.525 GHz Grade 3
RK825DTG5UKA	IWISE DT AM 25m 10.687 GHz Grade 3
RK825DTG5FRA	IWISE DT AM 25m 9.9 GHz Grade 3
RK825DTG5DEA	IWISE DT AM 25m 9.36 GHz Grade 3

ROKONET LIMITED WARRANTY

Rokonet Electronics, Ltd. and its subsidiaries and affiliates ("Seller") warrants its products to be free from defects in materials and workmanship under normal use for 12 months from the date of production. Because Seller does not install or connect the product and because the product may be used in conjunction with products not manufactured by the Seller, Seller can not guarantee the performance of the security system which uses this product. Sellers obligation and liability under this warranty is expressly limited to repairing and replacing, at Sellers option, within a reasonable time after the date of delivery, any product not meeting the specifications. Seller makes no other warranty, expressed or implied, and makes no warranty of merchantability or of fitness for any particular purpose.

In no case shall seller be liable for any consequential or incidental damages for breach of this or any other warranty, expressed or implied, or upon any other basis of liability whatsoever.

Sellers obligation under this warranty shall not include any transportation charges or costs of installation or any liability for direct, indirect, or consequential damages or delay.

Seller does not represent that its product may not be compromised or circumvented; that the product will prevent any personal; injury or property loss by burglary, robbery, fire or otherwise; or that the product will in all cases provide adequate warning or protection. Buyer understands that a properly installed and maintained alarm may only reduce the risk of burglary, robbery or fire without warning, but is not insurance or a guaranty that such will not occur or that there will be no personal injury or property loss as a result.

Consequently seller shall have no liability for any personal injury, property damage or loss based on a claim that the product fails to give warning. However, if seller is held liable, whether directly or indirectly, for any loss or damage arising from under this limited warranty or otherwise, regardless of cause or origin, sellers maximum liability shall not in any case exceed the purchase price of the product, which shall be complete and exclusive remedy against seller.

No employee or representative of Seller is authorized to change this warranty in any way or grant any other warranty.

WARNING: This product should be tested at least once a week.

ROKONET
RISCO GROUP

ROKONET ELECTRONICS LTD.
14 HACHOMA ST.
75[illegible] RISHON LETZION, ISRAEL.
TEL: (972) 3 963 7777
FAX: (972) 3 961 6584
www.rokonet.com

ROKONET USA:	TEL: 1 305	592 3820
	FAX: 1 305	592 3825
RISCO GROUP UK:	TEL: 44 (0)	161 655 5500
	FAX: 44 (0)	161 655 5501
ROKONET SPAIN	TEL: 34 (91)	4902133
	FAX: 34 (91)	4902134
ROKONET ITALY:	TEL: 39 (02)	3925 354
	FAX: 39 (02)	3925 131
ROKONET BRAZIL:	TEL: 55 (11)	3661-8767
	FAX: 55 (11)	3661-7783

EN50131-1 Grade 3 Approved

© Rokonet Electronics Ltd.

5IN815DTG3 06/05

INSTALLATION INSTRUCTIONS
iWISE
Green Line
DT AM 15m / 25m

ROKONET
RISCO GROUP

IWISE - Installation Documentation

Tips for the Installer

IWISE™ DT AM GRADE 3 WITH ACT™

The iWISE™ Dual Technology Anti Mask Detector with ACT™ represents the ultimate in detector technology for high-risk applications. This model combines two crucial anti-camouflage technologies, preventing BOTH masking AND cloaking attempts. Sophisticated Anti Masking technology detects attempts to spray or paint the lens or otherwise obstruct the view, while ROKONET 's revolutionary Anti-Cloak™ Technology detects intruder attempts to camouflage themselves.
Every attempt to bypass MW or PIR sensors is detected by the unprecedented intelligence of this detector.

IWISE™ DT AM GRADE 3 FEATURES

- MW & PIR technologies
- Anti-Cloak™ Technology (Patent Pending)
- Active IR Anti-Masking with separate relay
- Coverage 15m (50 ft) / 25m (82ft)
- EN50131-1 Grade 3 approved
- Indicates trouble in either MW or PIR channels
- Creep Zone
- Microwave range adjustment
- "Green line" setting - MW disabled during UNSET
- Flexible installation height up to 3.3 m (10' 10")
- Opto-relays – low current consumption and long life cycle
- Wall and cover tampers
- Selectable EOL (End of Line) Resistors
- Local Self Test
- Remote Self Test Input
- LEDs disable input
- 30 V/m RF immunity
- Anti-fluorescent interference signal processing
- Wall/corner or ceiling swivel (optional)
- Wall tamper-proof swivel (optional)
- Corridor lens (optional)

Detection is based on:

PIR (passive infra-red) which responds to changes in the ambient thermal radiation caused when an intruder crosses the protected area.

MW (microwave), which transmits, signals and analyzes the frequency changes of the reflected signal from an intruder using the Doppler effect.

An **ALARM** is initiated only when both technologies trigger simultaneously. Detection occurs only in areas where IR and MW patterns overlap thus greatly reducing the possibility of false alarms.

ANTI-MASKING

Detects any attempt by a person or object in close proximity to the unit to mask the detector. On detection of masking both AM and Alarm Relay are opened and the red LED flashes (see note below) until the masking object is removed.

NOTE:
The Anti-Mask function is operational only in UNSET mode.

ANTI-CLOAK™ TECHNOLOGY

ACT™ - Anti-Cloak™ Technology identifies cases in which PIR detection is problematic and automatically switches to microwave-only detection.

Anti-Cloak™ Technology will cope with any attempt of a burglar using camouflage techniques to conceal his IR radiation. When this situation is identified ACT™ automatically switches the detector to trigger alarms based primarily on detection from the microwave channel for a predefined window of time.

ACT™ also overcomes PIR technology's limitation of poor detection sensitivity when the ambient temperature is close to that of the human body. When this occurs the detector switches to single channel microwave triggering of alarms.

USING ACT™ MODE

To activate this mode, set the jumper to ACT™ ON/OFF Jumper (Refer to Fig. 1).
The MW range must be adjusted to the minimum needed, using the potentiometer located at the bottom of the PCB. It is important that the potentiometer is set to its lowest possible setting, which will provide full coverage for the entire protected area.
Do not use ACT™ mode in long range /corridor applications if you are expecting that there will be moving objects behind or on the side of the required protected area (the corridor).
Refer to Fig. 5

SELF TEST

Local Self Test
If there is no alarm detection after a 1 hour period the detector will self test both the PIR and MW channels. In case the local self test has failed, the AM Relay is activated.

Remote Self Test
The same self test can be initiated at any time by a control panel. When 12V attached to SET terminal is disconnected the Remote Self Test is activated. In case the remote self test passes, the Alarm Relay is activated for 5 seconds. In case test fails AM Relay is activated.

SELECTABLE EOL (End of Line) RESISTORS (See Fig. 2)

Two jumpers arrays allow selection of alarm and tamper EOL resistors of 1K, 2.2K, 4.7K and 5.6K with most control panels on the market. See Fig. 2 for selection.

"GREEN LINE" MW MODULE ACTIVATING/DEACTIVATING

In order to eliminate the MW emission in UNSET mode, 12V must be attached to the LED terminal. The detector is in the UNSET mode when no signal or GND are attached to SET terminal.

LED DISPLAY

When LED Jumper is ON and when no signal or GND are attached to the LED terminal:
- YELLOW LED indicates PIR detection
- GREEN LED indicates MW detection
- RED LED indicates alarm
- At Power-up, the LEDs will blink continuously, one after the other, until the end of the warm-up period (2-3 minutes).
- Flashing RED LED indicates AM detection.
- Flashing GREEN LED indicates trouble on MW channel.
- Flashing YELLOW LED indicates trouble on PIR channel.

NOTE:
- **AM and Trouble indications continue until masking objects is removed or trouble is corrected.**
- **LEDs maybe enabled/disabled by the panel via the LED terminal and the LEDs jumper should be closed. LEDs are disabled by attaching 12V to the LED terminal.**

INSTALLATION

STEP 1 PRELIMINARY CONSIDERATIONS

Before installation, study the space to be

WARNING: THE UNIT SHOULD NOT BE MOUNTED IN DIRECT SUNLIGHT OR NEAR ANY HEAT SOURCES. THE DETECTION SECTORS SHOULD BE POINTED EITHER TOWARDS A WALL OR TOWARDS THE FLOOR (NOT TOWARDS WINDOWS NOR CURTAINS). INSTALL ON SMOOTH SURFACES ONLY.

STEP 2 OPENING THE FRONT COVER

To open the front cover, turn the screw 3 full turns counterclockwise. With the screw loosened, press it 'in' to release the front cover. If a fixing screw is not used, press the tab, which is located behind the screw hole. The front cover can now be removed.

STEP 3 REMOVING THE PC BOARD

Loosen the holding screw, which is located on the right hand side of the PCB and slide the PCB up until the screw enters the widened opening. The PCB can now be lifted off.

STEP 4 MOUNTING

The iWISE™ DT AM can either be mounted on a flat surface or in a corner.
a.Open the knockout holes on the rear cover, include the wall tampers knockout hole.
b.Insert the cable through the cable opening.
c.Mount the rear cover in its final location.
d.Seal the remaining holes with sealant.
e.After mounting the rear cover, return the PCB into its desired position.

STEP 5 PC BOARD ADJUSTMENT

After the Detector base has been mounted, reinstall the PCB. To choose the correct vertical adjustment position for WIDE ANGLE LENS RL115DV installed at a height between 2.1m - 2.7m (6'11" - 8'10") use the scale on the bottom left hand side of the PCB as follows:

SCALE POSITION BASED ON ROOM SIZE: FOR RK815DTG3

Mounting Height	LONG	SHORT
2.1m-2.7m (6'11"-8'10")	15m (49'2")	6m (19'8")
2.7m-3.3m (6'11"-10'10")	* 15m (*49'2")	–

*** NOTE: For installations above 2.7m (8'10"); for every 30cm (1') additional height, slide the PCB up one small line (on the scale). The line needs to be located in the middle of the plastic scale mark. Refer to the diagram Fig. 6.**

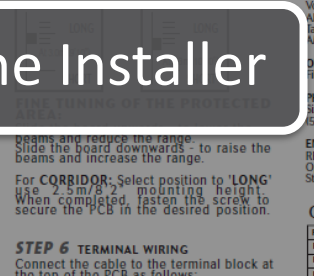

beams and reduce the range.
Slide the board downwards - to raise the beams and increase the range.

For **CORRIDOR**: Select position to **'LONG'** use 2.5m/8'2" mounting height. When completed, fasten the screw to secure the PCB in the desired position.

STEP 6 TERMINAL WIRING

Connect the cable to the terminal block at the top of the PCB as follows:

12 VDC:	Power supply input.
ALARM:	Normally closed output.
TAMPER:	Normally closed dry output.
AM:	Normally closed output.
LED:	12V activated input
SET:	12V activated input

STEP 7 JUMPER SETTING (See Fig. 1)

The iWISE™ DT AM has a few jumpers that can either be in (used) or out (unused).
Unused jumpers should be placed on one pin only to prevent their loss.

STEP 8 WALK TEST

Two minutes after applying power (warm-up period), walk test the Detector over the entire protected area to verify proper operation of the unit.

NOTE:
- **Ensure you replace the front cover before carrying out a Walk Test.**
- **The MW range can be adjusted by using the potentiometer, which is located at the bottom of the PCB. It is important to set the potentiometer to the lowest possible setting that will still provide enough coverage for the entire protected area.**

STEP 9 FINAL SETUP

After completing the installation and the testing stages, ensure all jumpers are in their desired positions. The unit is now ready for use.

PROCEDURE FOR CHANGING LENSES (See Fig. 4.)

A pigmented lens is attached to the inside of the front plastic cover using a sensor protective sleeve.
1. Remove the sensor protecting sleeve by pushing up the clip that holds the top part of the sleeve to the front cover.
2. Disconnect the lens from the sleeve by gently lifting it from the holding pins that secure it to the sides of the sleeve.
3. Select the desired lens and make sure that the cut corners are pointed upwards.
4. Place the two pins, which are located on the top and bottom of the lens, into the matching holes on the sleeve.
5. Place the holes on either side of the lens into their matching holding pins located on the sides of the sleeve.
6. Insert the protective sleeve back into place on the front cover.

SPECIFICATIONS

ELECTRICAL
Current consumption: 12mA at 12 VDC, 37mA at 12 VDC (max. with all LED's ON)
Voltage requirements: 9-16 VDC
Alarm contacts: 24 VDC, 0.1A
Tamper contacts: 24 VDC, 0.1A
AM contacts: 24 VDC, 0.1A

OPTICAL
Filtering: White Light Protection

PHYSICAL
Size: 127.6 x 64.2 x 40.9mm (5 x 2.5 x 1.6 in.)

ENVIRONMENTAL
RF immunity (10MHz to 1GHz): 30V/m
Operating temperature: -20°C to 55°C (-4°F to 131°F)
Storage Temperature: -20°C to 60°C (-4°F to 140°F)

Ordering Information

Part number	Description
RK815DTG300A	IWISE DT AM 15m 10.525 GHz Grade 3
RK815DTG3UKA	IWISE DT AM 15m 10.587 GHz Grade 3
RK815DTG3FRA	IWISE DT AM 15m 9.9 GHz Grade 3
RK815DTG3DEA	IWISE DT AM 15m 9.36 GHz Grade 3
RK825DTG300A	IWISE DT AM 25m 10.525 GHz Grade 3
RK825DTG3UKA	IWISE DT AM 25m 10.587 GHz Grade 3
RK825DTG3FRA	IWISE DT AM 25m 9.9 GHz Grade 3
RK825DTG3DEA	IWISE DT AM 25m 9.36 GHz Grade 3

ROKONET LIMITED WARRANTY

Rokonet Electronics, Ltd. and its subsidiaries and affiliates ("Seller") warrants its products to be free from defects in materials and workmanship under normal use for 12 months from the date of production. Because Seller does not install or connect the product and because the product may be used in conjunction with products not manufactured by the Seller, Seller can not guarantee the performance of the security system which uses this product. Sellers obligation and liability under this warranty is expressly limited to repairing and replacing, at Sellers option, within a reasonable time after the date of delivery, any product not meeting the specifications. Seller makes no other warranty, expressed or implied, and makes no warranty of merchantability or of fitness for any particular purpose.

In no case shall seller be liable for any consequential or incidental damages for breach of this or any other warranty, expressed or implied, or upon any other basis of liability whatsoever.

Sellers obligation under this warranty shall not include any transportation charges or costs of installation or any liability for direct, indirect, or consequential damages or delay.

Seller does not represent that its product may not be compromised or circumvented; that the product will prevent any personal; injury or property loss by burglary, robbery, fire or otherwise; or that the product will in all cases provide adequate warning or protection. Buyer understands that a properly installed and maintained alarm may only reduce the risk of burglary, robbery or fire without warning, but is not insurance or a guaranty that such will not occur or that there will be no personal injury or property loss as a result.

Consequently seller shall have no liability for any personal injury, property damage or loss based on a claim that the product fails to give warning. However, if seller is held liable, whether directly or indirectly, for any loss or damage arising from under this limited warranty or otherwise, regardless of cause or origin, sellers maximum liability shall not in any case exceed the purchase price of the product, which shall be complete and exclusive remedy against seller.

No employee or representative of Seller is authorized to change this warranty in any way or grant any other warranty.

WARNING: This product should be tested at least once a week.

ROKONET
RISCO GROUP

ROKONET ELECTRONICS LTD.
14 HACHOMA ST.
75655 RISHON LETZION. ISRAEL.
TEL: (972) 3 963 7777
FAX: (972) 3 961 6584
www.rokonet.com

ROKONET USA:	TEL: 1 305	592 3820
	FAX: 1 305	592 3825
RISCO GROUP UK:	TEL: 44 (0)	161 655 5500
	FAX: 44 (0)	161 655 5501
ROKONET SPAIN	TEL: 34 (91)	4902133
	FAX: 34 (91)	4902134
ROKONET ITALY:	TEL: 39 (02)	3925 354
	FAX: 39 (02)	3925 131
ROKONET BRAZIL:	TEL: 55 (11)	3661-8767
	FAX: 55 (11)	3661-7783

EN50131-1 Grade 3 Approved

© Rokonet Electronics Ltd.

5IN815DTG3 06/05

INSTALLATION INSTRUCTIONS
iWISE
Green Line
DT AM 15m / 25m

ROKONET
RISCO GROUP

IWISE - Installation Documentation

Proper Installation Workflow

IWISE™ DT AM GRADE 3 WITH ACT™

The iWISE™ Dual Technology Anti Mask Detector with ACT™ represents the ultimate in detector technology for high-risk applications. This model combines two crucial anti-camouflage technologies, preventing BOTH masking AND cloaking attempts. Sophisticated Anti Masking technology detects attempts to spray or paint the lens or otherwise obstruct the view, while ROKONET 's revolutionary Anti-Cloak™ Technology detects intruder attempts to camouflage themselves.
Every attempt to bypass MW or PIR sensors is detected by the unprecedented intelligence of this detector.

IWISE™ DT AM GRADE 3 FEATURES

- MW & PIR technologies
- Anti-Cloak™ Technology (Patent Pending)
- Active IR Anti-Masking with separate relay
- Coverage 15m (50 ft) / 25m (82ft)
- EN50131-1 Grade 3 approved
- Indicates trouble in either MW or PIR channels
- Creep Zone
- Microwave range adjustment
- "Green line" setting - MW disabled during UNSET
- Flexible installation height up to 3.3 m (10'10")
- Opto-relays – low current consumption and long life cycle
- Wall and cover tampers
- Selectable EOL (End of Line) Resistors
- Local Self Test
- Remote Self Test Input
- LEDs disable input
- 30 V/m RF immunity
- Anti-fluorescent interference signal processing
- Wall/corner or ceiling swivel (optional)
- Wall tamper-proof swivel (optional)
- Corridor lens (optional)

Detection is based on:

PIR (passive infra-red) which responds to changes in the ambient thermal radiation caused when an intruder crosses the protected area.

MW (microwave), which transmits, signals and analyzes the frequency changes of the reflected signal from an intruder using the Doppler effect.

An **ALARM** is initiated only when both technologies trigger simultaneously. Detection occurs only in areas where IR and MW patterns overlap thus greatly reducing the possibility of false alarms.

ANTI-MASKING

Detects any attempt by a person or object in close proximity to the unit to mask the detector. On detection of masking both AM and Alarm Relay are opened and the red LED flashes (see note below) until the masking object is removed.

NOTE:
The Anti-Mask function is operational only in UNSET mode.

ANTI-CLOAK™ TECHNOLOGY

ACT™ - Anti-Cloak™ Technology identifies cases in which PIR detection is problematic and automatically switches to microwave-only detection.

Anti-Cloak™ Technology will cope with any attempt of a burglar using camouflage techniques to conceal his IR radiation. When this situation is identified ACT™ automatically switches the detector to trigger alarms based primarily on detection from the microwave channel for a predefined window of time.

ACT™ also overcomes PIR technology's limitation of poor detection sensitivity when the ambient temperature is close to that of the human body. When this occurs the detector switches to single channel microwave triggering of alarms.

USING ACT™ MODE

To activate this mode, set the jumper to ACT™ ON/OFF Jumper (Refer to Fig. 1).
The MW range must be adjusted to the minimum needed, using the potentiometer located at the bottom of the PCB. It is important that the potentiometer is set to its lowest possible setting, which will provide full coverage for the entire protected area.
Do not use ACT™ mode in long range /corridor applications if you are expecting that there will be moving objects behind or on the side of the required protected area (the corridor).
Refer to Fig. 5

SELF TEST

Local Self Test
If there is no alarm detection after a 1 hour period the detector will self test both the PIR and MW channels. In case the local self test has failed, the AM Relay is activated.

Remote Self Test
The same self test can be initiated at any time by a control panel. When 12V attached to SET terminal is disconnected the Remote Self Test is activated. In case the remote self test passes, the Alarm Relay is activated for 5 seconds. In case test fails AM Relay is activated.

SELECTABLE EOL (End of Line) RESISTORS (See Fig. 2)

Two jumpers arrays allow selection of alarm and tamper EOL resistors of 1K, 2.2K, 4.7K and 5.6K with most control panels on the market. See Fig. 2 for selection.

"GREEN LINE" MW MODULE ACTIVATING/DEACTIVATING

In order to eliminate the MW emission in UNSET mode, 12V must be attached to the LED terminal. The detector is in the UNSET mode when no signal or GND are attached to SET terminal.

LED DISPLAY

When LED Jumper is ON and when no signal or GND are attached to the LED terminal:
- YELLOW LED indicates PIR detection
- GREEN LED indicates MW detection
- RED LED indicates alarm
- At Power-up, the LEDs will blink continuously, one after the other, until the end of the warm-up period (2-3 minutes).
- Flashing RED LED indicates AM detection.
- Flashing GREEN LED indicates trouble on MW channel.
- Flashing YELLOW LED indicates trouble on PIR channel.

NOTE:
- **AM and Trouble indications continue until masking objects is removed or trouble is corrected.**
- **LEDs maybe enabled/disabled by the panel via the LED terminal and the LEDs jumper should be closed. LEDs are disabled by attaching 12V to the LED terminal.**

INSTALLATION

STEP 1 PRELIMINARY CONSIDERATIONS

Before installation, study the space to be protected carefully in order to choose the exact placement of the unit and lens for the best possible coverage.

Corner installations are recommended. The Detector should be installed so that the beam patterns are at 45° (optimal) to the intruder's expected path. Installation height should be 2.5m (8'2") with the RL-15V/RL-17V lens. Use Fig 3 and step 5 for guidance.

WARNING: THE UNIT SHOULD NOT BE MOUNTED IN DIRECT SUNLIGHT OR NEAR ANY HEAT SOURCES. THE DETECTION SECTORS SHOULD BE POINTED EITHER TOWARDS A WALL OR TOWARDS THE FLOOR (NOT TOWARDS WINDOWS NOR CURTAINS). INSTALL ON SMOOTH SURFACES ONLY.

STEP 2 OPENING THE FRONT COVER

To open the front cover, turn the screw 3 full turns counterclockwise. With the screw loosened, press it 'in' to release the front cover. If a fixing screw is not used, press the tab, which is located behind the screw hole. The front cover can now be removed.

STEP 3 REMOVING THE PC BOARD

Loosen the holding screw, which is located on the right hand side of the PCB and slide the PCB up until the screw enters the widened opening. The PCB can now be lifted off.

STEP 4 MOUNTING

The iWISE™ DT AM can either be mounted on a flat surface or in a corner.
a.Open the knockout holes on the rear cover, include the wall tampers knockout hole.
b.Insert the cable through the cable opening.
c.Mount the rear cover in its final location.
d.Seal the remaining holes with sealant.
e.After mounting the rear cover, return the PCB into its desired position.

STEP 5 PC BOARD ADJUSTMENT

After the Detector base has been mounted, reinstall the PCB. To choose the correct vertical adjustment position for WIDE ANGLE LENS RL115DV installed at a height between 2.1m - 2.7m (6'11" - 8'10") use the scale on the bottom left hand side of the PCB as follows:

SCALE POSITION BASED ON ROOM SIZE:
FOR RK815DTG3

Mounting Height	LONG	SHORT
2.1m-2.7m (6'11"-8'10")	15m (49'2")	6m (19'8")
2.7m-3.3m (8'11"-10'10")	*15m (*49'2")	–

*** NOTE: For installations above 2.7m (8'10"); for every 30cm (1') additional height, slide the PCB up one small line (on the scale). The line needs to be located in the middle of the plastic scale mark. Refer to the diagram Fig. 6.**

FINE TUNING OF THE PROTECTED AREA:
Slide the board upwards - to lower the beams and reduce the range.
Slide the board downwards - to raise the beams and increase the range.

For **CORRIDOR:** Select position to **'LONG'** use 2.5m/8'2" mounting height. When completed, fasten the screw to secure the PCB in the desired position.

STEP 6 TERMINAL WIRING

Connect the cable to the terminal block at the top of the PCB as follows:

12 VDC:	Power supply input.
ALARM:	Normally closed output.
TAMPER:	Normally closed dry output.
AM:	Normally closed output.
LED:	12V activated input
SET:	12V activated input

STEP 7 JUMPER SETTING (See Fig. 1)

The iWISE™ DT AM has a few jumpers that can either be in (used) or out (unused).
Unused jumpers should be placed on one pin only to prevent their loss.

STEP 8 WALK TEST

Two minutes after applying power (warm-up period), walk test the Detector over the entire protected area to verify proper operation of the unit.

NOTE:
- Ensure you replace the front cover before carrying out a Walk Test.
- The MW range can be adjusted by using the potentiometer, which is located at the bottom of the PCB. It is important to set the potentiometer to the lowest possible setting that will still provide enough coverage for the entire protected area.

STEP 9 FINAL SETUP

After completing the installation and the testing stages, ensure all jumpers are in their desired positions. The unit is now ready for use.

PROCEDURE FOR CHANGING LENSES (See Fig. 4.)

A pigmented lens is attached to the inside of the front plastic cover using a sensor protective sleeve.
1. Remove the sensor protecting sleeve by pushing up the clip that holds the top part of the sleeve to the front cover.
2. Disconnect the lens from the sleeve by gently lifting it from the holding pins that secure it to the sides of the sleeve.

3. Select the desired lens and make sure that the

VDC (max. with all LED's ON)
Voltage requirements: 9-16 VDC
Alarm contacts: 24 VDC, 0.1A
Tamper contacts: 24 VDC, 0.1A
AM contacts: 24 VDC, 0.1A

OPTICAL
Filtering: White Light Protection

PHYSICAL
Size: 127.6 x 64.2 x 40.9mm
(5 x 2.5 x 1.6 in.)

ENVIRONMENTAL
RF immunity (10MHz to 1GHz): 30V/m
Operating temperature: -20°C to 55°C (-4°F to 131°F)
Storage Temperature: -20°C to 60°C (-4°F to 140°F)

Ordering Information

Part number	Description
RK815DTG500A	IWISE DT AM 15m 10.525 GHz Grade 3
RK815DTG5UKA	IWISE DT AM 15m 10.687 GHz Grade 3
RK815DTG5FRA	IWISE DT AM 15m 9.9 GHz Grade 3
RK815DTG5DEA	IWISE DT AM 15m 9.35 GHz Grade 3
RK825DTG500A	IWISE DT AM 25m 10.525 GHz Grade 3
RK825DTG5UKA	IWISE DT AM 25m 10.687 GHz Grade 3
RK825DTG5FRA	IWISE DT AM 25m 9.9 GHz Grade 3
RK825DTG5DEA	IWISE DT AM 25m 9.35 GHz Grade 3

ROKONET LIMITED WARRANTY

Rokonet Electronics, Ltd. and its subsidiaries and affiliates ("Seller") warrants its products to be free from defects in materials and workmanship under normal use for 12 months from the date of production. Because Seller does not install or connect the product and because the product may be used in conjunction with products not manufactured by the Seller, Seller can not guarantee the performance of the security system which uses this product. Sellers obligation and liability under this warranty is expressly limited to repairing and replacing, at Sellers option, within a reasonable time after the date of delivery, any product not meeting the specifications. Seller makes no other warranty, expressed or implied, and makes no warranty of merchantability or of fitness for any particular purpose.

In no case shall seller be liable for any consequential or incidental damages for breach of this or any other warranty, expressed or implied, or upon any other basis of liability whatsoever.

Sellers obligation under this warranty shall not include any transportation charges or costs of installation or any liability for direct, indirect, or consequential damages or delay.

Seller does not represent that its product may not be compromised or circumvented; that the product will prevent any personal; injury or property loss by burglary, robbery, fire or otherwise; or that the product will in all cases provide adequate warning or protection. Buyer understands that a properly installed and maintained alarm may only reduce the risk of burglary, robbery or fire without warning, but is not insurance or a guaranty that such will not occur or that there will be no personal injury or property loss as a result.

Consequently seller shall have no liability for any personal injury, property damage or loss based on a claim that the product fails to give warning. However, if seller is held liable, whether directly or indirectly, for any loss or damage arising from under this limited warranty or otherwise, regardless of cause or origin, sellers maximum liability shall not in any case exceed the purchase price of the product, which shall be complete and exclusive remedy against seller.

No employee or representative of Seller is authorized to change this warranty in any way or grant any other warranty.

WARNING: This product should be tested at least once a week.

ROKONET
13 HACHOMA ST.
75656 RISHON LE'TZION, ISRAEL
TEL: (972) 3 963 7777
FAX: (972) 3 961 6584
www.rokonet.com

ROKONET USA:	TEL: 1 305	592 3820
	FAX: 1 305	592 3825
RISCO GROUP UK:	TEL: 44 (0)	161 655 5500
	FAX: 44 (0)	161 655 5501
ROKONET SPAIN	TEL: 34 (91)	4902133
	FAX: 34 (91)	4902134
ROKONET ITALY:	TEL: 39 (02)	3925 354
	FAX: 39 (02)	3925 131
ROKONET BRAZIL:	TEL: 55 (11)	3661-8767
	FAX: 55 (11)	3661-7783

EN50131-1 Grade 3 Approved

© Rokonet Electronics Ltd.

5IN815DTG3 06/05

INSTALLATION INSTRUCTIONS
iWISE
Green Line
DT AM 15m / 25m

ROKONET
RISCO GROUP

IWISE - Installation Documentation

Device Specifications

IWISE™ DT AM GRADE 3 WITH ACT™

The iWISE™ Dual Technology Anti Mask Detector with ACT™ represents the ultimate in detector technology for high-risk applications. This model combines two crucial anti-camouflage technologies, preventing BOTH masking AND cloaking attempts. Sophisticated Anti Masking technology detects attempts to spray or paint the lens or otherwise obstruct the view, while ROKONET 's revolutionary Anti-Cloak™ Technology detects intruder attempts to camouflage themselves.
Every attempt to bypass MW or PIR sensors is detected by the unprecedented intelligence of this detector.

IWISE™ DT AM GRADE 3 FEATURES

- MW & PIR technologies
- Anti-Cloak™ Technology (Patent Pending)
- Active IR Anti-Masking with separate relay
- Coverage 15m (50 ft) / 25m (82ft)
- EN50131-1 Grade 3 approved
- Indicates trouble in either MW or PIR channels
- Creep Zone
- Microwave range adjustment
- "Green line" setting - MW disabled during UNSET
- Flexible installation height up to 3.3 m (10' 10")
- Opto-relays – low current consumption and long life cycle
- Wall and cover tampers
- Selectable EOL (End of Line) Resistors
- Local Self Test
- Remote Self Test Input
- LEDs disable input
- 30 V/m RF immunity
- Anti-fluorescent interference signal processing
- Wall/corner or ceiling swivel (optional)
- Wall tamper-proof swivel (optional)
- Corridor lens (optional)

Detection is based on:

PIR (passive infra-red) which responds to changes in the ambient thermal radiation caused when an intruder crosses the protected area.

MW (microwave), which transmits, signals and analyzes the frequency changes of the reflected signal from an intruder using the Doppler effect.

An **ALARM** is initiated only when both technologies trigger simultaneously. Detection occurs only in areas where IR and MW patterns overlap thus greatly reducing the possibility of false alarms.

ANTI-MASKING

Detects any attempt by a person or object in close proximity to the unit to mask the detector. On detection of masking both AM and Alarm Relay are opened and the red LED flashes (see note below) until the masking object is removed.

NOTE:
The Anti-Mask function is operational only in UNSET mode.

ANTI-CLOAK™ TECHNOLOGY

ACT™ - Anti-Cloak™ Technology identifies cases in which PIR detection is problematic and automatically switches to microwave-only detection.

Anti-Cloak™ Technology will cope with any attempt of a burglar using camouflage techniques to conceal his IR radiation. When this situation is identified ACT™ automatically switches the detector to trigger alarms based primarily on detection from the microwave channel for a predefined window of time.

ACT™ also overcomes PIR technology's limitation of poor detection sensitivity when the ambient temperature is close to that of the human body. When this occurs the detector switches to single channel microwave triggering of alarms.

USING ACT™ MODE

To activate this mode, set the jumper to ACT™ ON/OFF Jumper (Refer to Fig. 1).
The MW range must be adjusted to the minim needed, using the potentiometer located at th bottom of the PCB. It is important that the potentiometer is set to its lowest possible sett which will provide full coverage for the entire protected area.
Do not use ACT™ mode in long range /corridor applications if you are expecting that there will be moving objects behind or on the side of the required protected area (the corridor).
Refer to Fig. 5

SELF TEST

Local Self Test
If there is no alarm detection after a 1 hour period the detector will self test both the PIR and MW channels. In case the local self test has failed, the AM Relay is activated.

Remote Self Test
The same self test can be initiated at any time by a control panel. When 12V attached to SET terminal is disconnected the Remote Self Test is activated. In case the remote self test passes, the Alarm Relay is activated for 5 seconds. In case test fails AM Relay is activated.

SELECTABLE EOL (End of Line) RESISTORS (See Fig. 2)

Two jumpers arrays allow selection of alarm and tamper EOL resistors of 1K, 2.2K, 4.7K and 5.6K with most control panels on the market. See Fig. 2 for selection.

"GREEN LINE" MW MODULE ACTIVATING/DEACTIVATING

In order to eliminate the MW emission in UNSET mode, 12V must be attached to the LED terminal. The detector is in the UNSET mode when no signal or GND are attached to SET terminal.

LED DISPLAY

When LED Jumper is ON and when no signal or GND are attached to the LED terminal:
- YELLOW LED indicates PIR detection
- GREEN LED indicates MW detection
- RED LED indicates alarm
- At Power-up, the LEDs will blink continuously, one after the other, until the end of the warm-up period (2-3 minutes).
- Flashing RED LED indicates AM detection.
- Flashing GREEN LED indicates trouble on MW channel.
- Flashing YELLOW LED indicates trouble on PIR channel.

NOTE:
- **AM and Trouble indications continue until masking objects is removed or trouble is corrected.**
- **LEDs maybe enabled/disabled by the panel via the LED terminal and the LEDs jumper should be closed. LEDs are disabled by attaching 12V to the LED terminal.**

INSTALLATION

STEP 1 PRELIMINARY CONSIDERATIONS

Before installation, study the space to be protected carefully in order to choose the exact placement of the unit and lens for the

Corner installations are recommended. The

WARNING: THE UNIT SHOULD NOT BE MOUNTED IN DIRECT SUNLIGHT OR NEAR ANY HEAT SOURCES. THE DETECTION SECTORS SHOULD BE POINTED EITHER TOWARDS A WALL OR TOWARDS THE FLOOR (NOT TOWARDS WINDOWS NOR CURTAINS). INSTALL ON SMOOTH SURFACES ONLY.

STEP 2 OPENING THE FRONT COVER

To open the front cover, turn the screw 3 full turns counterclockwise. With the screw loosened, press it 'in' to release the front cover. If a fixing screw is not used, press the tab, which is located behind the screw hole. The front cover can now be removed.

STEP 3 REMOVING THE PC BOARD

Loosen the holding screw, which is located on the right hand side of the PCB and slide the PCB up until the screw enters the widened opening. The PCB can now be lifted off.

STEP 4 MOUNTING

The iWISE™ DT AM can either be mounted on a flat surface or in a corner.
a.Open the knockout holes on the rear cover, include the wall tampers knockout hole.
b.Insert the cable through the cable opening.
c.Mount the rear cover in its final location.
d.Seal the remaining holes with sealant.
e.After mounting the rear cover, return the PCB into its desired position.

STEP 5 PC BOARD ADJUSTMENT

After the Detector base has been mounted, reinstall the PCB. To choose the correct vertical adjustment position for WIDE ANGLE LENS RL115DV installed at a height between 2.1m - 2.7m (6'11" - 8'10") use the scale on the bottom left hand side of the PCB as follows:

SCALE POSITION BASED ON ROOM SIZE: FOR RK815DTG3

Mounting Height	LONG	SHORT
2.1m-2.7m (6'11"-8'10")	15m (49'2")	6m (19'8")
2.7m-3.3m (6'11"-10'10")	*15m (*49'2")	–

*** NOTE: For installations above 2.7m (8'10"); for every 30cm (1') additional height, slide the PCB up one small line (on the scale). The line needs to be located in the middle of the plastic scale mark. Refer to the diagram Fig. 6.**

For CORRIDOR: Select position to 'LONG' use 2.5m/8'2" mounting height. When completed, fasten the screw to secure the PCB in the desired position.

STEP 6 TERMINAL WIRING

Connect the cable to the terminal block at the top of the PCB as follows:

12 VDC:	Power supply input.
ALARM:	Normally closed output.
TAMPER:	Normally closed dry output.
AM:	Normally closed output.
LED:	12V activated input
SET:	12V activated input

STEP 7 JUMPER SETTING (See Fig. 1)

The iWISE™ DT AM has a few jumpers that can either be in (used) or out (unused).
Unused jumpers should be placed on one pin only to prevent their loss.

STEP 8 WALK TEST

Two minutes after applying power (warm-up period), walk test the Detector over the entire protected area to verify proper operation of the unit.

NOTE:
- Ensure you replace the front cover before carrying out a Walk Test.
- The MW range can be adjusted by using the potentiometer, which is located at the bottom of the PCB. It is important to set the potentiometer to the lowest possible setting that will still provide enough coverage for the entire protected area.

STEP 9 FINAL SETUP

After completing the installation and the testing stages, ensure all jumpers are in their desired positions. The unit is now ready for use.

PROCEDURE FOR CHANGING LENSES (See Fig. 4.)

A pigmented lens is attached to the inside of the front plastic cover using a sensor protective sleeve.
1. Remove the sensor protecting sleeve by pushing up the clip that holds the top part of the sleeve to the front cover.
2. Disconnect the lens from the sleeve by gently lifting it from the holding pins that secure it to the sides of the sleeve.
3. Select the desired lens and make sure that the cut corners are pointed upwards.
4. Place the two pins, which are located on the top and bottom of the lens, into the matching holes on the sleeve.
5. Place the holes on either side of the lens into their matching holding pins located on the sides of the sleeve.
6. Insert the protective sleeve back into place on the front cover.

SPECIFICATIONS

ELECTRICAL
Current consumption: 12mA at 12 VDC, 37mA at 12 VDC (max. with all LED's ON)
Voltage requirements: 9-16 VDC
Alarm contacts: 24 VDC, 0.1A
Tamper contacts: 24 VDC, 0.1A
AM contacts: 24 VDC, 0.1A

OPTICAL
Filtering: White Light Protection

PHYSICAL
Size: 127.6 x 64.2 x 40.9mm
(5 x 2.5 x 1.6 in.)

ENVIRONMENTAL
RF immunity (10MHz to 1GHz): 30V/m
Operating temperature: -20°C to 55°C (-4°F to 131°F)
Storage Temperature: -20°C to 60°C (-4°F to 140°F)

Ordering Information

Part number	Description
RK815DTG500A	IWISE DT AM 15m 10.525 GHz Grade 3
RK815DTG5UKA	IWISE DT AM 15m 10.687 GHz Grade 3
RK815DTG5FRA	IWISE DT AM 15m 9.9 GHz Grade 3
RK815DTG5DEA	IWISE DT AM 15m 9.35 GHz Grade 3
RK825DTG500A	IWISE DT AM 25m 10.525 GHz Grade 3
RK825DTG5UKA	IWISE DT AM 25m 10.687 GHz Grade 3
RK825DTG5FRA	IWISE DT AM 25m 9.9 GHz Grade 3
RK825DTG5DEA	IWISE DT AM 25m 9.35 GHz Grade 3

ROKONET LIMITED WARRANTY

Rokonet Electronics, Ltd. and its subsidiaries and affiliates ("Seller") warrants its products to be free from defects in materials and workmanship under normal use for 12 months from the date of production. Because Seller does not install or connect the product and because the product may be used in conjunction with products not manufactured by the Seller, Seller can not guarantee the performance of the security system which uses this product. Sellers obligation and liability under this warranty is expressly limited to repairing and replacing, at Sellers option, within a reasonable time after the date of delivery, any product not meeting the specifications. Seller makes no other warranty, expressed or implied, and makes no warranty of merchantability or of fitness for any particular purpose.

In no case shall seller be liable for any consequential or incidental damages for breach of this or any other warranty, expressed or implied, or upon any other basis of liability whatsoever.

Sellers obligation under this warranty shall not include any transportation charges or costs of installation or any liability for direct, indirect, or consequential damages or delay.

Seller does not represent that its product may not be compromised or circumvented; that the product will prevent any personal; injury or property loss by burglary, robbery, fire or otherwise; or that the product will in all cases provide adequate warning or protection. Buyer understands that a properly installed and maintained alarm may only reduce the risk of burglary, robbery or fire without warning, but is not insurance or a guaranty that such will not occur or that there will be no personal injury or property loss as a result.

Consequently seller shall have no liability for any personal injury, property damage or loss based on a claim that the product fails to give warning. However, if seller is held liable, whether directly or indirectly, for any loss or damage arising from under this limited warranty or otherwise, regardless of cause or origin, sellers maximum liability shall not in any case exceed the purchase price of the product, which shall be complete and exclusive remedy against seller.

No employee or representative of Seller is authorized to change this warranty in any way or grant any other warranty.

WARNING: This product should be tested at least once a week.

ROKONET
RISCO GROUP

ROKONET ELECTRONICS LTD.
14 HACHOMA ST.
75655 RISHON LETZION. ISRAEL.
TEL: (972) 3 963 7777
FAX: (972) 3 961 6584
www.rokonet.com

ROKONET USA:	TEL: 1 305	592 3820
	FAX: 1 305	592 3825
RISCO GROUP UK:	TEL: 44 (0)	161 655 5500
	FAX: 44 (0)	161 655 5501
ROKONET SPAIN	TEL: 34 (91)	4902133
	FAX: 34 (91)	4902134
ROKONET ITALY:	TEL: 39 (02)	3925 354
	FAX: 39 (02)	3925 131
ROKONET BRAZIL:	TEL: 55 (11)	3661-8767
	FAX: 55 (11)	3661-7783

EN50131-1 Grade 3 Approved

© Rokonet Electronics Ltd.

5IN815DTG3 06/05

INSTALLATION INSTRUCTIONS
iWISE
Green Line
DT AM 15m / 25m

ROKONET
RISCO GROUP

IWISE - Installation Documentation

IWISE™ DT AM GRADE 3 WITH ACT™

The iWISE™ Dual Technology Anti Mask Detector with ACT™ represents the ultimate in detector technology for high-risk applications. This model combines two crucial anti-camouflage technologies, preventing BOTH masking AND cloaking attempts. Sophisticated Anti Masking technology detects attempts to spray or paint the lens or otherwise obstruct the view, while ROKONET 's revolutionary Anti-Cloak™ Technology detects intruder attempts to camouflage themselves.
Every attempt to bypass MW or PIR sensors is detected by the unprecedented intelligence of this detector.

IWISE™ DT AM GRADE 3 FEATURES

- MW & PIR technologies
- Anti-Cloak™ Technology (Patent Pending)
- Active IR Anti-Masking with separate relay
- Coverage 15m (50 ft) / 25m (82ft)
- EN50131-1 Grade 3 approved
- Indicates trouble in either MW or PIR channels
- Creep Zone
- Microwave range adjustment
- "Green line" setting - MW disabled during UNSET
- Flexible installation height up to 3.3 m (10'10")
- Opto-relays – low current consumption and long life cycle
- Wall and cover tampers
- Selectable EOL (End of Line) Resistors
- Local Self Test
- Remote Self Test Input
- LEDs disable input
- 30 V/m RF immunity
- Anti-fluorescent interference signal processing
- Wall/corner or ceiling swivel (optional)
- Wall tamper-proof swivel (optional)
- Corridor lens (optional)

Detection is based on:

PIR (passive infra-red) which responds to changes in the ambient thermal radiation caused when an intruder crosses the protected area.

MW (microwave), which transmits, signals and analyzes the frequency changes of the reflected signal from an intruder using the Doppler effect.

An **ALARM** is initiated only when both technologies trigger simultaneously. Detection occurs only in areas where IR and MW patterns overlap thus greatly reducing the possibility of false alarms.

ANTI-MASKING

Detects any attempt by a person or object in close proximity to the unit to mask the detector. On detection of masking both AM and Alarm Relay are opened and the red LED flashes (see note below) until the masking object is removed.

NOTE:
The Anti-Mask function is operational only in UNSET mode.

ANTI-CLOAK™ TECHNOLOGY

ACT™ - Anti-Cloak™ Technology identifies cases in which PIR detection is problematic and automatically switches to microwave-only detection.

Anti-Cloak™ Technology will cope with any attempt of a burglar using camouflage techniques to conceal his IR radiation. When this situation is identified ACT™ automatically switches the detector to trigger alarms based primarily on detection from the microwave channel for a predefined window of time.

ACT™ also overcomes PIR technology's limitation of poor detection sensitivity when the ambient temperature is close to that of the human body. When this occurs the detector switches to single channel microwave triggering of alarms.

USING ACT™ MODE

To activate this mode, set the jumper to ACT™ ON/OFF Jumper (Refer to Fig. 1).
The MW range must be adjusted to the minimum needed, using the potentiometer located at the bottom of the PCB. It is important that the potentiometer is set to its lowest possible setting, which will provide full coverage for the entire protected area.
Do not use ACT™ mode in long range /corridor applications if you are expecting that there will be moving objects behind or on the side of the required protected area (the corridor).
Refer to Fig. 5

SELF TEST

Local Self Test
If there is no alarm detection after a 1 hour period the detector will self test both the PIR and MW channels. In case the local self test has failed, the AM Relay is activated.

Remote Self Test
The same self test can be initiated at any time by a control panel. When 12V attached to SET terminal is disconnected the Remote Self Test is activated. In case the remote self test passes, the Alarm Relay is activated for 5 seconds. In case test fails AM Relay is activated.

SELECTABLE EOL (End of Line) RESISTORS (See Fig. 2)

Two jumpers arrays allow selection of alarm and tamper EOL resistors of 1K, 2.2K, 4.7K and 5.6K with most control panels on the market. See Fig. 2 for selection.

"GREEN LINE" MW MODULE ACTIVATING/DEACTIVATING

In order to eliminate the MW emission in UNSET mode, 12V must be attached to the LED terminal. The detector is in the UNSET mode when no signal or GND are attached to SET terminal.

LED DISPLAY

When LED Jumper is ON and when no signal or GND are attached to the LED terminal:
- YELLOW LED indicates PIR detection
- GREEN LED indicates MW detection
- RED LED indicates alarm
- At Power-up, the LEDs will blink continuously, one after the other, until the end of the warm-up period (2-3 minutes).
- Flashing RED LED indicates AM detection.
- Flashing GREEN LED indicates trouble on MW channel.
- Flashing YELLOW LED indicates trouble on PIR channel.

NOTE:
- **AM and Trouble indications continue until masking objects is removed or trouble is corrected.**
- **LEDs maybe enabled/disabled by the panel via the LED terminal and the LEDs jumper should be closed. LEDs are disabled by attaching 12V to the LED terminal.**

INSTALLATION

STEP 1 PRELIMINARY CONSIDERATIONS

Before installation, study the space to be protected carefully in order to choose the exact placement of the unit and lens for the best possible coverage.

Corner installations are recommended. The Detector should be installed so that the beam patterns are at 45° (optimal) to the intruder's expected path. Installation height should be 2.5m (8'2") with the RL-15V/RL-17V lens. Use Fig 3 and step 5 for guidance.

WARNING: THE UNIT SHOULD NOT BE MOUNTED IN DIRECT SUNLIGHT OR

DETECTION SECTORS SHOULD BE POINTED EITHER TOWARDS A WALL

STEP 2 OPENING THE FRONT COVER

To open the front cover, turn the screw 3 full turns counterclockwise. With the screw loosened, press it 'in' to release the front cover. If a fixing screw is not used, press the tab, which is located behind the screw hole. The front cover can now be removed.

STEP 3 REMOVING THE PC BOARD

Loosen the holding screw, which is located on the right hand side of the PCB and slide the PCB up until the screw enters the widened opening. The PCB can now be lifted off.

STEP 4 MOUNTING

The iWISE™ DT AM can either be mounted on a flat surface or in a corner.
a.Open the knockout holes on the rear cover, include the wall tampers knockout hole.
b.Insert the cable through the cable opening.
c.Mount the rear cover in its final location.
d.Seal the remaining holes with sealant.
e.After mounting the rear cover, return the PCB into its desired position.

STEP 5 PC BOARD ADJUSTMENT

After the Detector base has been mounted, reinstall the PCB. To choose the correct vertical adjustment position for WIDE ANGLE LENS RL115DV installed at a height between 2.1m - 2.7m (6'11" - 8'10") use the scale on the bottom left hand side of the PCB as follows:

SCALE POSITION BASED ON ROOM SIZE: FOR RK815DTG3

Mounting Height	LONG	SHORT
2.1m-2.7m (6'11"-8'10")	15m (49'2")	6m (19'8")
2.7m-3.3m (6'11"-10'10")	*15m (*49'2")	–

*** NOTE: For installations above 2.7m (8'10"); for every 30cm (1') additional height, slide the PCB up one small line (on the scale). The line needs to be located in the middle of the plastic scale mark. Refer to the diagram Fig. 6.**

FINE TUNING OF THE PROTECTED AREA:

Slide the board upwards - to lower the beams and reduce the range.
Slide the board downwards - to raise the beams and increase the range.

For CORRIDOR: Select position to 'LONG'

LED: 12V activated input
SET: 12V activated input

STEP 7 JUMPER SETTING (See Fig. 1)

The iWISE™ DT AM has a few jumpers that can either be in (used) or out (unused).
Unused jumpers should be placed on one pin only to prevent their loss.

STEP 8 WALK TEST

Two minutes after applying power (warm-up period), walk test the Detector over the entire protected area to verify proper operation of the unit.

NOTE:
- **Ensure you replace the front cover before carrying out a Walk Test.**
- **The MW range can be adjusted by using the potentiometer, which is located at the bottom of the PCB. It is important to set the potentiometer to the lowest possible setting that will still provide enough coverage for the entire protected area.**

STEP 9 FINAL SETUP

After completing the installation and the testing stages, ensure all jumpers are in their desired positions. The unit is now ready for use.

PROCEDURE FOR CHANGING LENSES (See Fig. 4.)

A pigmented lens is attached to the inside of the front plastic cover using a sensor protective sleeve.
1. Remove the sensor protecting sleeve by pushing up the clip that holds the top part of the sleeve to the front cover.
2. Disconnect the lens from the sleeve by gently lifting it from the holding pins that secure it to the sides of the sleeve.
3. Select the desired lens and make sure that the cut corners are pointed upwards.
4. Place the two pins, which are located on the top and bottom of the lens, into the matching holes on the sleeve.
5. Place the holes on either side of the lens into their matching holding pins located on the sides of the sleeve.
6. Insert the protective sleeve back into place on the front cover.

SPECIFICATIONS

ELECTRICAL
Current consumption: 12mA at 12 VDC, 37mA at 12 VDC (max. with all LED's ON)
Voltage requirements: 9-16 VDC
Alarm contacts: 24 VDC, 0.1A
Tamper contacts: 24 VDC, 0.1A
AM contacts: 24 VDC, 0.1A

OPTICAL
Filtering: White Light Protection

PHYSICAL
Size: 127.6 x 64.2 x 40.9mm
(5 x 2.5 x 1.6 in.)

ENVIRONMENTAL
RF immunity (10MHz to 1GHz): 30V/m
Operating temperature: -20°C to 55°C (-4°F to 131°F)
Storage Temperature: -20°C to 60°C (-4°F to 140°F)

Limited Warranty

Ordering Information

Part number	Description
RK815DTG300A	IWISE DT AM 15m 10.525 GHz Grade 3
RK815DTG3UKA	IWISE DT AM 15m 10.687 GHz Grade 3
RK815DTG3FRA	IWISE DT AM 15m 9.9 GHz Grade 3
RK815DTG3DEA	IWISE DT AM 15m 9.35 GHz Grade 3
RK825DTG300A	IWISE DT AM 25m 10.525 GHz Grade 3
RK825DTG3UKA	IWISE DT AM 25m 10.687 GHz Grade 3
RK825DTG3FRA	IWISE DT AM 25m 9.9 GHz Grade 3
RK825DTG3DEA	IWISE DT AM 25m 9.35 GHz Grade 3

ROKONET LIMITED WARRANTY

Rokonet Electronics, Ltd. and its subsidiaries and affiliates ("Seller") warrants its products to be free from defects in materials and workmanship under normal use for 12 months from the date of production. Because Seller does not install or connect the product and because the product may be used in conjunction with products not manufactured by the Seller, Seller can not guarantee the performance of the security system which uses this product. Sellers obligation and liability under this warranty is expressly limited to repairing and replacing, at Sellers option, within a reasonable time after the date of delivery, any product not meeting the specifications. Seller makes no other warranty, expressed or implied, and makes no warranty of merchantability or of fitness for any particular purpose.

In no case shall seller be liable for any consequential or incidental damages for breach of this or any other warranty, expressed or implied, or upon any other basis of liability whatsoever.

Sellers obligation under this warranty shall not include any transportation charges or costs of installation or any liability for direct, indirect, or consequential damages or delay.

Seller does not represent that its product may not be compromised or circumvented; that the product will prevent any personal; injury or property loss by burglary, robbery, fire or otherwise; or that the product will in all cases provide adequate warning or protection. Buyer understands that a properly installed and maintained alarm may only reduce the risk of burglary, robbery or fire without warning, but is not insurance or a guaranty that such will not occur or that there will be no personal injury or property loss as a result.

Consequently seller shall have no liability for any personal injury, property damage or loss based on a claim that the product fails to give warning. However, if seller is held liable, whether directly or indirectly, for any loss or damage arising from under this limited warranty or otherwise, regardless of cause or origin, sellers maximum liability shall not in any case exceed the purchase price of the product, which shall be complete and exclusive remedy against seller.

No employee or representative of Seller is authorized to change this warranty in any way or grant any other warranty.

WARNING: This product should be tested at least once a week.

ROKONET
RISCO GROUP

ROKONET ELECTRONICS LTD.
14 HACHOMA ST.
75655 RISHON LETZION. ISRAEL.
TEL: (972) 3 963 7777
FAX: (972) 3 961 6584

www.rokonet.com

ROKONET USA:	TEL: 1 305	592 3820
	FAX: 1 305	592 3825
RISCO GROUP UK:	TEL: 44 (0)	161 655 5500
	FAX: 44 (0)	161 655 5501
ROKONET SPAIN	TEL: 34 (91)	4902133
	FAX: 34 (91)	4902134
ROKONET ITALY:	TEL: 39 (02)	3925 354
	FAX: 39 (02)	3925 131
ROKONET BRAZIL:	TEL: 55 (11)	3661-8767
	FAX: 55 (11)	3661-7783

EN50131-1 Grade 3 Approved

© Rokonet Electronics Ltd.

5IN815DTG3 06/05

INSTALLATION INSTRUCTIONS

iWISE
Green Line
DT AM 15m / 25m

ROKONET
RISCO GROUP

IWISE - Installation Documentation

FIG 1.

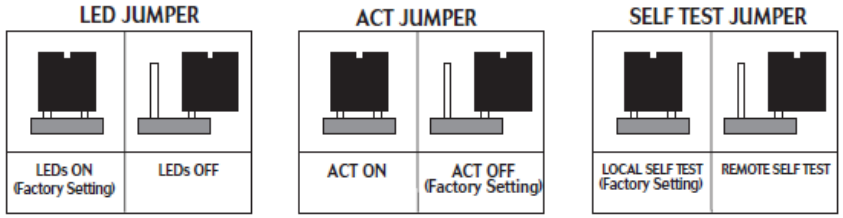

FIG 2. SCHEMATIC OF EOL RESISTORS

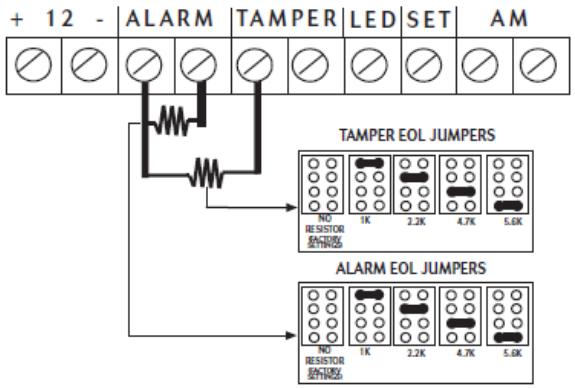

FIG 3. iWISE DT AM GRADE 3 LENSES

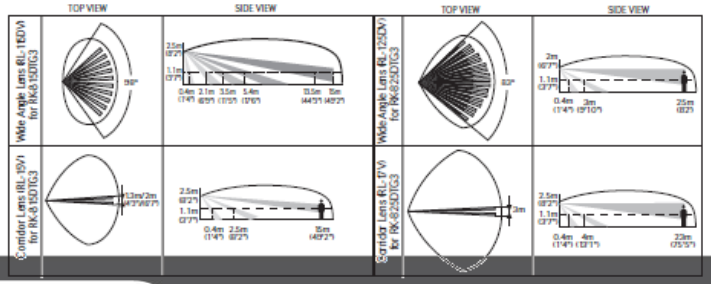

FIG 4.
Lens Replacement

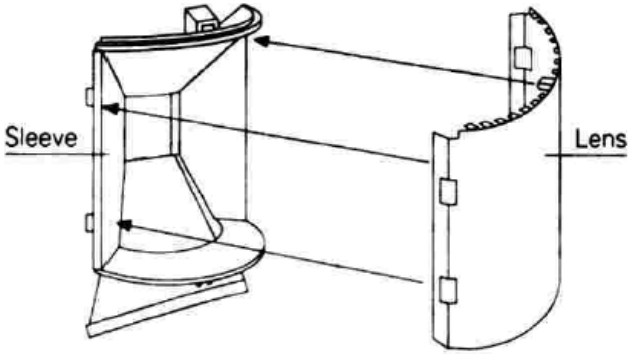

FIG 5.
MW Range Adjustment

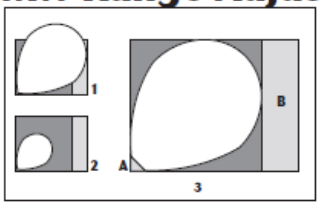

MW range adjustment
1. Over power
2. Under power
3. Correct adjustment
A. Detector
B. Corridor

Table for P/N: RK815DTG300A
RK825DTG300A

~~AT~~	BE	~~DE~~	~~DK~~
DK	ES	~~FI~~	~~FR~~
GR	IE	IT	It
LU	MT	NL	~~PT~~
SE	~~UK~~		

PART NO.: RK815DTG3UKA
RK825DTG3UKA
Intended for use in the UK only!

Table for P/N: RK815DTG3FRA
RK825DTG3FRA

AT	~~DE~~	CZ	~~DK~~
~~DK~~	~~ES~~	FI	FR
~~GR~~	~~IE~~	~~IT~~	~~IE~~
~~LU~~	~~MT~~	~~NL~~	PT
~~SE~~	~~UK~~		

PART NO.: RK815DTG3DEA
RK825DTG3DEA
Intended for use in Germany only!

Agenda

- Installation Documentation
- Installation Workflow
- Installation Troubleshooting

Installation Workflow

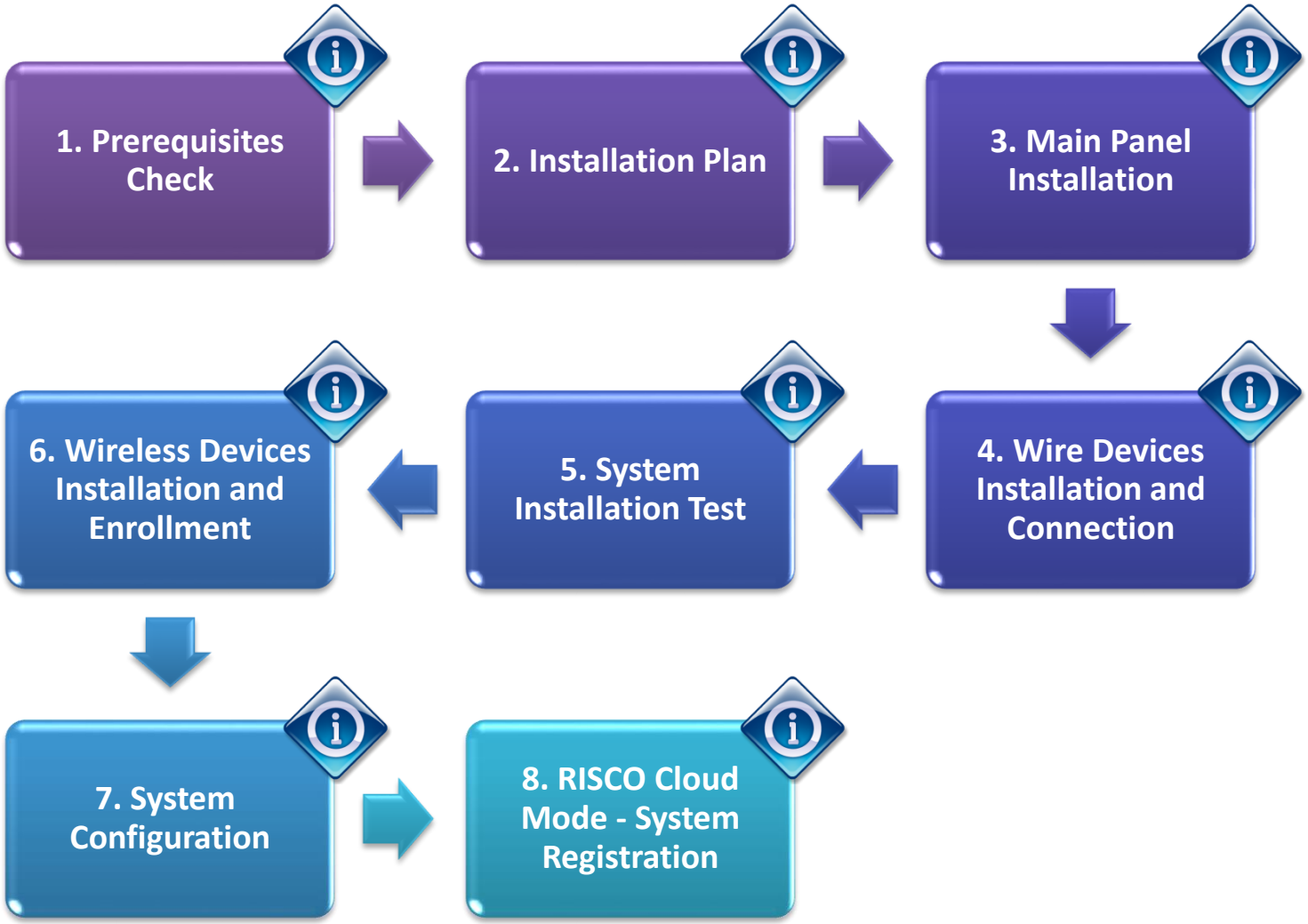

Hands-on

Agenda

- ✔ Installation Documentation
- ✔ Installation Workflow
- ✔ Installation Troubleshooting

Troubleshooting - Scenario #1

Scenario:

- The installer noticed an error message when exiting the programming menu
- “DIP2 is on”

What can be the cause of the problem ?

- DIP Switch -2 is in ON position

Solution:

- Set the DIP Switch -2 to OFF position

Troubleshooting - Scenario #2

Scenario:

- The installer noticed “Open Tamper” message on the Keypad while exiting the Programming Menu

What can be the cause of the problem ?

- One of the Tampers in the system is Open

Solution:

- Check all Tampers in the system
- Close the Open Tamper

Troubleshooting - Scenario #3

Scenario:

- The installer notices ‘Bell Loop Fault’ after existing Programming Mode

What can be the cause of the problem ?

- No internal Speaker Connected to the Main Panel

Solution:

- Connect Speaker to the Main Panel
- If no Speaker is to installed, connect a 2.2K resistor between BELL and LS terminals

Troubleshooting - Scenario #4

Scenario:

- The Installer cannot enter the Programming Menu

What can be the cause of the problem ?

- System is Armed

Solution:

- Disarm the System and enter the Programming Menu

Troubleshooting - Scenario #5

Scenario:

- The installer notices that the Red LED on the Keypad is flashing rapidly

What can be the cause of the problem ?

- The Main Board is updating Keypad Software version

Solution:

- Wait several minutes until the Keypad software version successfully updates

Troubleshooting - Scenario #6

Scenario:

- The installer cannot arm the System

What can be the cause of the problem ?

- One of the Zones are still Open

Solution:

- Verify all the zones are closed by using the “Up” and “Down” keypad keys

Troubleshooting - Scenario #7

Scenario:

- The installer notices a Low Battery notification on the Keypad

What can be the cause of the problem ?

- The Panel is not receiving a voltage reading from the battery

Solution:

- Check Battery is connected and Polarity right way round
- Check battery Voltage

Troubleshooting - Scenario #8

Scenario:

- The installer noticed that the Detector is not testing or activating

What can be the cause of the problem ?

- The Detector is not installed in the system
- The Detector is not assigned to a zone
- The Detector is wired incorrectly

Solution:

- Enroll the Detector to the system
- Assign the detector to a zone
- Carry out a Bus Test

Troubleshooting - Scenario #9

Scenario:

- The installer noticed the Zone input on a detector is not working

What can be the cause of the problem ?

- Detector is not installed in the system
- Detector is not assigned to a zone
- Detector is wired incorrectly

Solution:

- Enroll Detector to the system
- Assign detector to a zone
- Carry out Bus Test

Troubleshooting - Scenario #10

Scenario:

- The User reports that the Zone is still activates in PART_SET

What can be the cause of the problem ?

- Programming of Zone type is incorrect

Solution:

- Redefine zone type so omitted in Part-Set

Troubleshooting - Scenario #11

Scenario:

- The installer noticed that No Comm. (Device)=XX

What can be the cause of the problem ?

- No communication with the expansion device

Solution:

- Perform a Bus test
  - Bus quality < 90% ; it is possible that more than one device has the same ID address
  - Bus quality = 0% ;this can indicate the following faults:
    - No power to the device
    - Device ID incorrect. Down power device and re-address.
    - Incorrect device installed in ADD/DEL Mods section.

Summary

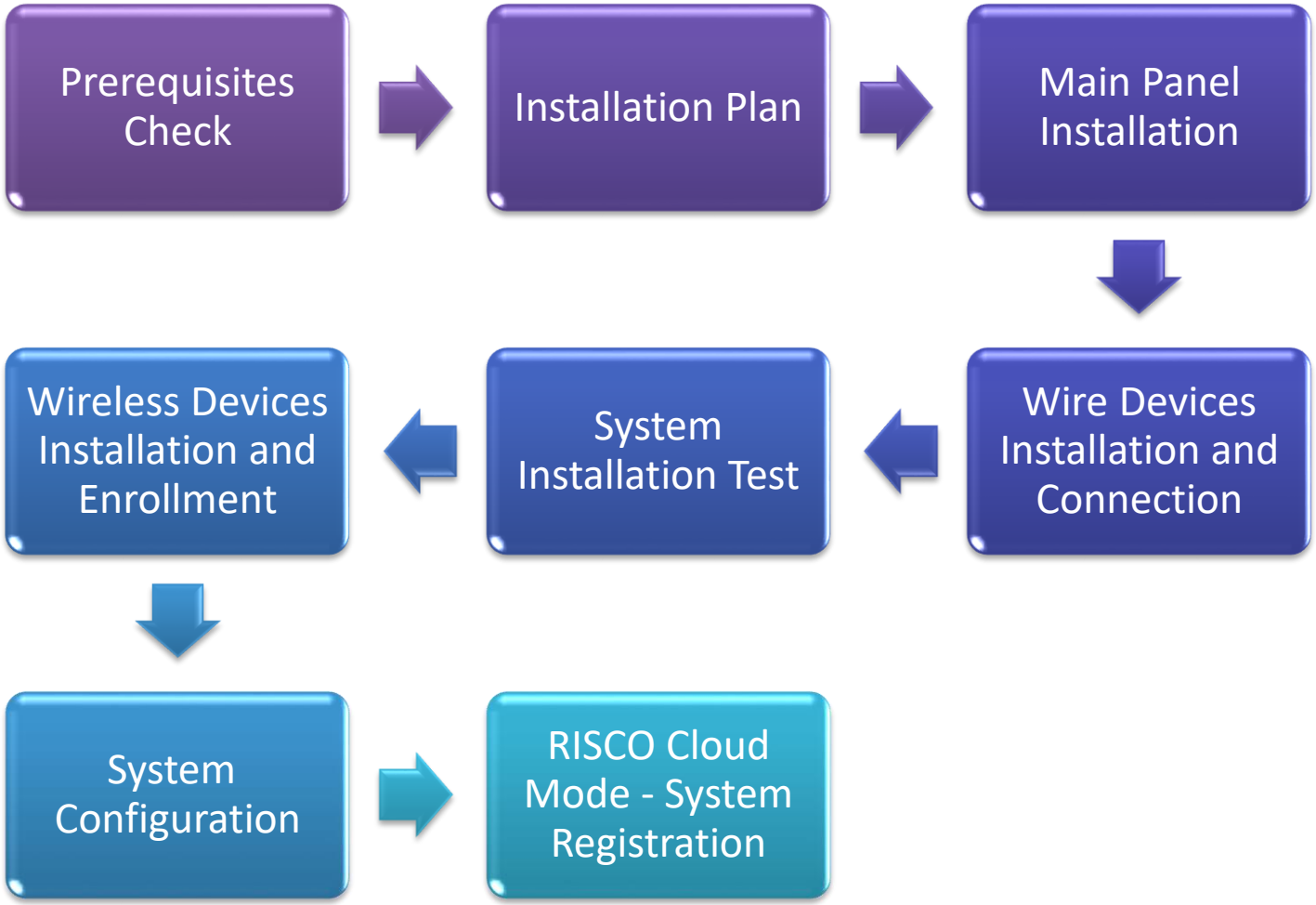
Prerequisites Check
Installation Plan
Main Panel Installation
Wire Devices Installation and Connection
System Installation Test
Wireless Devices Installation and Enrollment
System Configuration
RISCO Cloud Mode - System Registration

Any Questions?

Thank You

RISCO GROUP

riscogroup.com